5 Series

500A11

Geothermal heat pump

1-6 ton (single speed)
2-6 ton (dual capacity)

WaterFurnace
Smarter from the Ground Up™

Submittal Data
English Language/IP Units
SD2500AN 11/17

Contractor: _____ P.O.: _____

Engineer: _____

Project Name: _____ Unit Tag: _____

Model Nomenclature

1	2	3	4-6	7	8	9	10	11	12	13	14	15	16
N	D	V	049	*	1	1	1	C	T	L	0	A	N

Model Type
N – 5 Series Water-to-Air

Compressor Type
D – Dual-Stage
S – Single Stage

Cabinet Configuration
V – Vertical
H - Horizontal

Unit Capacity (MBTUH)
012, 018, 022, 026, 030
036, 038, 042, 048, 049
060, 064, 070, 072

Vintage
* – Internal Factory Use Only

Voltage
1 – 208-230/60/1

Hot Water Generation
0 – No Hot Water Generation
1 – Hot Water Generation with Factory Installed Pump

Blower Options
0 – PSC (Single Stage Only)
1 – Variable Speed ECM
2 – High Static Variable Speed ECM (036-049 Only)
3 – High Static PSC (022, 030, 036, 042, 048)
4 – 5-Speed ECM (022-072)

IntelliStart® & Air Coil Option*
N – No IntelliStart, Uncoated Coil
A – IntelliStart, Uncoated Coil
B – No IntelliStart, AlumiSeal
C – IntelliStart, AlumiSeal

Control Option
A – Aurora™ Base Control (ABC)
B – Aurora Advanced Control (ABC & AXB)
C – Aurora Performance Package (018 – 072, ECM Blowers Only)[2]
D – Aurora Performance and Refrigeration Package (018 – 072, ECM Blowers Only)[2]
E – Aurora™ Base Control w UPC[2,3]
F – Aurora Advanced Control w UPC[2,3]
G – Aurora Performance Package w UPC[2,3]
H – Aurora Performance and Refrigeration Package w UPC[2,3]

Filter Option
0 – 2 inch MERV11 Filter
1 – AlpinePure 411 (Vertical Only, 022-072)[1]

Return Air Configuration
L – Left
R – Right

Discharge Air Configuration
T – Top (Vertical)
B – Bottom (Vertical)
R – Rear (Vertical)
S – Side (Horizontal)
E – End (Horizontal)

Water Coil Option
C – Copper
N – CuproNickel

Notes:
All Models include sound kits as std. equipment
[1] Available on vertical configurations only
[2] Control option not available with PSC motor
[3] UPC is not compatible with Symphony or IntelliZone2

Rev.: 10/4/2017

WaterFurnace works continually to improve its products. As a result, the design and specifications of each product at the time of order may be changed without notice. Please contact WaterFurnace at 1-888-929-2837 for latest design and specifications. Purchaser's approval of this data set signifies that the equipment is acceptable under the provisions of the job specification. Statements and other information contained herein are not express warranties and do not form the basis of any bargain between the parties, but are merely WaterFurnace's opinion or commendation of its products. The latest version of this document is available at www.waterfurnace.com.

Contractor: _____ P.O.: _____

Engineer: _____

Project Name: _____ Unit Tag: _____

AHRI/ISO 13256-1 Performance Ratings

Variable Speed ECM or 5-Speed ECM Motor

AHRI/ASHRAE/ISO 13256-1
English (IP) Units

Model	Capacity Modulation	Flow Rate		Water Loop Heat Pump				Ground Water Heat Pump				Ground Loop Heat Pump			
				Cooling EWT 86° F		Heating EWT 68° F		Cooling EWT 59° F		Heating EWT 50° F		Cooling Brine Full Load 77° F Part Load 68° F		Heating Brine Full Load 32°F Part Load 41°F	
		gpm	cfm	Capacity Btuh	EER Btuh/W	Capacity Btuh	COP	Capacity Btuh	EER Btuh/W	Capacity Btuh	COP	Capacity Btuh	EER	Heating Capacity	COP
026	Full	8	950	24,900	16.8	30,100	5.5	27,700	24.0	23,900	4.8	26,400	19.6	19,500	4.0
026	Part	7	750	18,900	18.6	22,000	6.1	22,200	29.7	17,500	4.9	21,000	26.0	16,400	4.5
038	Full	9	1300	36,500	17.0	43,300	5.5	40,000	24.4	35,000	4.9	38,200	19.7	28,500	4.2
038	Part	8	1150	26,500	19.0	31,300	6.4	29,900	32.1	24,900	5.1	29,500	28.0	22,900	4.8
049	Full	12	1600	49,100	17.2	59,000	5.5	54,100	24.5	47,200	4.6	50,800	19.3	38,200	4.0
049	Part	11	1400	36,300	19.1	41,700	6.1	41,600	33.0	33,600	4.7	39,800	27.4	31,000	4.4
064	Full	16	1800	62,300	16.4	73,900	5.2	69,000	23.9	60,400	4.6	65,500	19.3	47,300	3.8
064	Part	14	1500	45,800	18.1	53,200	5.9	53,000	30.7	43,500	4.8	50,500	26.5	38,200	4.3
072	Full	18	2000	70,100	15.6	88,000	4.8	79,000	22.0	71,000	4.3	73,800	18.2	55,400	3.7
072	Part	16	1500	54,200	17.0	66,000	5.1	61,500	27.6	52,700	4.3	59,400	24.9	47,400	3.9
018	Single	5	600	17,400	15.7	23,000	5.3	20,600	26.0	18,700	4.6	18,500	18.3	14,500	3.8
022	Single	8	800	18,100	15.6	23,700	6.0	21,900	27.5	19,500	5.0	19,200	18.7	15,000	4.0
030	Single	8	1000	27,000	18.9	32,900	5.6	31,200	29.5	26,000	4.8	28,100	22.0	20,500	3.9
036	Single	9	1200	32,300	18.8	36,500	5.7	36,800	28.8	29,200	4.9	33,700	22.0	24,400	4.2
042	Single	11	1300	39,000	18.6	45,600	5.8	43,900	28.1	36,100	4.9	40,700	21.7	28,900	4.0
048	Single	12	1500	44,100	16.3	55,600	5.4	50,300	25.9	44,700	4.7	45,900	18.8	36,400	4.0
060	Single	15	1800	61,100	16.4	74,100	5.5	66,900	24.3	59,200	4.7	62,200	18.4	47,900	4.0
070	Single	18	2000	66,200	15.3	85,000	5.0	75,000	22.9	68,000	4.4	69,100	17.6	54,000	3.7

NOTE: 018 not available with 5-Speed ECM motor

7/15/2015

Cooling capacities based upon 80.6°F DB, 66.2°F WB entering air temperature
Heating capacities based upon 68°F DB, 59°F WB entering air temperature
All ratings based upon 208V operation

WaterFurnace works continually to improve its products. As a result, the design and specifications of each product at the time of order may be changed without notice. Please contact WaterFurnace at 1-888-929-2837 for latest design and specifications. Purchaser's approval of this data set signifies that the equipment is acceptable under the provisions of the job specification. Statements and other information contained herein are not express warranties and do not form the basis of any bargain between the parties, but are merely WaterFurnace's opinion or commendation of its products. The latest version of this document is available at www.waterfurnace.com.

AHRI/ISO 13256-1 Performance Ratings cont.

PSC Motors

AHRI/ASHRAE/ISO 13256-1
English (IP) Units

Model	Modulation Capacity	Flow Rate		Water Loop Heat Pump				Ground Water Heat Pump				Ground Loop Heat Pump			
				Cooling EWT 86°F		Heating EWT 68°F		Cooling EWT 59°F		Heating EWT 50°F		Cooling Brine Full Load 77°F Part Load 68°F		Heating Brine Full Load 32°F Part Load 41°F	
		gpm	cfm	Capacity Btuh	EER Btuh/W	Capacity Btuh	COP	Capacity Btuh	EER Btuh/W	Capacity Btuh	COP	Capacity Btuh	EER Btuh/W	Capacity Btuh	COP
012	Single	4	400	11280	14	14800	5	13200	23.1	12000	4.2	12000	16.5	9500	3.5
018	Single	5	600	17400	14.8	23000	5.1	20600	24.7	18700	4.3	18500	17.3	14500	3.5
022	Single	8	850	17200	13.6	23500	5.9	20100	25.5	19400	4.8	17700	16.2	15000	3.8
030	Single	8	900	26800	17.9	32900	5.3	30800	27.1	26000	4.7	27900	21.1	20300	3.7
036	Single	9	1200	31500	14.8	40200	5.3	35100	24.4	29200	4.5	32900	19.2	24400	3.8
042	Single	11	1300	38300	15.4	45600	5.2	42300	23.3	36000	4.3	40300	18.5	28900	3.5
048	Single	12	1500	43200	13.3	55600	4.9	48900	22.3	44700	4.2	45500	16	36400	3.7
060	Single	15	1800	61000	15.2	74100	5.2	66600	22.8	57300	4.4	62300	17.4	46100	3.7
070	Single	18	2000	66200	14.4	85000	4.6	73500	20.8	67100	4	69100	16.6	53500	3.4

Cooling capacities based upon 80.6°F DB, 66.2°F WB entering air temperature
Heating capacities based upon 68°F DB, 59°F WB entering air temperature
All ratings based upon 208V operation

7/15/2015

WaterFurnace works continually to improve its products. As a result, the design and specifications of each product at the time of order may be changed without notice. Please contact WaterFurnace at 1-888-929-2837 for latest design and specifications. Purchaser's approval of this data set signifies that the equipment is acceptable under the provisions of the job specification. Statements and other information contained herein are not express warranties and do not form the basis of any bargain between the parties, but are merely WaterFurnace's opinion or commendation of its products. The latest version of this document is available at www.waterfurnace.com.

AHRI/ISO 13256-1 Performance Ratings cont.

Energy Star Compliance Table

Model	Tier 3	
	Ground Water	Ground Loop
012	P	-
018	E, P	E
022	E, X, P	E, X
026	E, X	E, X
030	E, X, P	E, X, P
036	E, X, P	E, X, P
038	E, X	E, X
042	E, X, P	E, X
048	E, X, P	E, X
049	E, X	E, X
060	E, X, P	E, X, P
064	E, X	E, X
070	E, X	E, X
072	E, X	E, X

12/14/16

E - Unit with Variable Speed ECM Blower
X - Unit with 5-Speed ECM Blower
P - Unit with PSC Blower

Energy Star Rating Criteria
In order for water-source heat pumps to be Energy Star rated they must meet or exceed the minimum efficiency requirements listed below. Tier 3 represents the current minimum efficiency water source heat pumps must have in order to be Energy Start rated.

Tier 3: 1/1/2012 – No Effective End Date Published

Water-to-Air	**EER**	**COP**
Ground Loop	17.1	3.6
Ground Water	21.1	4.1
Water-to-Water		
Ground Loop	16.1	3.1
Ground Water	20.1	3.5

ENERGY STAR

AHRI CERTIFIED™ www.ahridirectory.org
Water Source HP
ANSI/AHRI/ASHRAE/ISO13256-1

WaterFurnace works continually to improve its products. As a result, the design and specifications of each product at the time of order may be changed without notice. Please contact WaterFurnace at 1-888-929-2837 for latest design and specifications. Purchaser's approval of this data set signifies that the equipment is acceptable under the provisions of the job specification. Statements and other information contained herein are not express warranties and do not form the basis of any bargain between the parties, but are merely WaterFurnace's opinion or commendation of its products. The latest version of this document is available at www.waterfurnace.com.

Contractor: _____ P.O.: _____

Engineer: _____

Project Name: _____ Unit Tag: _____

Vertical Dimensional Data

Top Air Discharge

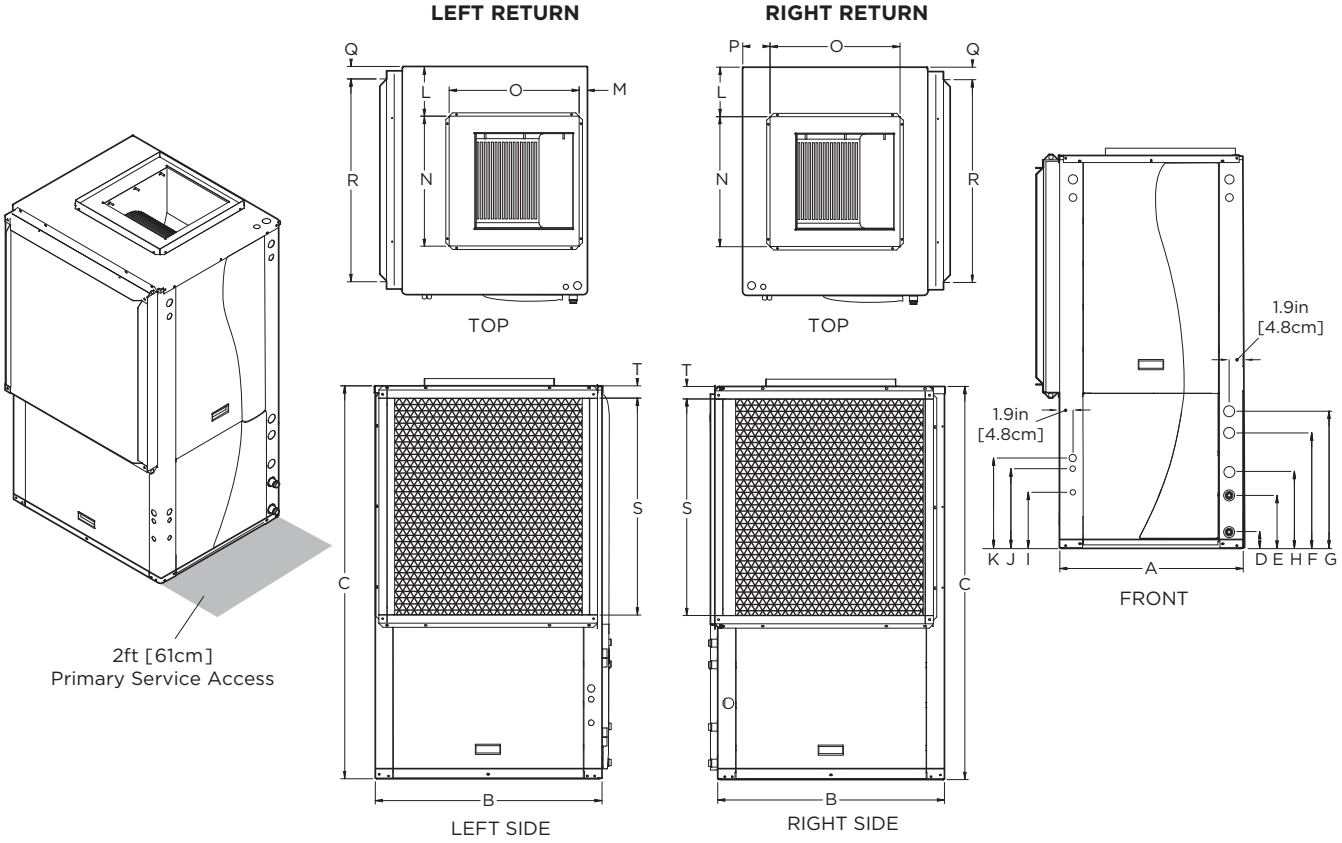

Vertical Top Flow Model		Overall Cabinet			Water Connections							Electrical Connections			Discharge Connection duct flange installed (±0.10 in)					Return Connection using std deluxe filter rack (±0.10 in)			
		A	B	C	D	E	F	G	H	Loop	HWG	I 3/4 in. cond	J 1/2 in. cond	K 1/2 in. cond	L	M	N	O	P	Q	R	S	T
		Width	Depth	Height	Loop In	Loop Out	HWG In	HWG Out	Cond-ensate	Water FPT	Sweat (I.D.)	Power Supply	Ext Pump	Low Voltage			Supply Width	Supply Depth			Return Depth	Return Height	
012	in.	22.2	22.5	34.5	2.3	5.3	11.9	14.9	8.6	1 in.	1/2 in.	6.9	9.4	11.7	6.1	3.7	10.0	10.0	0.7	2.4	18.1	14.2	1.7
	cm.	56.4	57.2	87.6	5.9	13.5	30.2	37.8	21.8	Swivel	Female	17.5	23.9	29.7	15.5	9.4	25.4	25.4	1.8	6.1	46.0	36.1	4.3
018	in.	22.5	26.5	39.4	2.3	5.3	13.4	16.4	9.6	1 in.	1/2 in.	6.9	9.4	11.7	6.3	0.7	14.0	14.0	2.7	2.3	22.0	18.0	2.0
	cm.	57.2	67.3	100.1	5.8	13.5	34.0	41.7	24.4	Swivel	Female	17.5	23.9	29.7	16.0	1.8	35.6	35.6	6.9	5.8	55.9	45.7	5.1
022-030	in.	22.5	26.5	48.5	2.0	7.0	13.5	16.5	10.2	1 in.	1/2 in.	9.5	12.1	14.3	6.1	0.8	14.0	14.0	4.4	1.7	22.2	26.0	1.7
	cm.	57.2	67.3	123.2	5.1	17.8	34.3	41.9	25.9	Swivel	Female	24.1	30.7	36.3	15.5	2.0	35.6	35.6	11.2	4.3	56.4	66.0	4.3
036-038	in.	25.6	31.6	50.4	2.3	7.3	15.9	18.9	10.6	1 in.	1/2 in.	9.5	12.1	14.3	6.9	1.1	18.0	18.0	3.8	1.7	28.1	26.0	1.7
	cm.	65.0	80.3	128.0	5.8	18.5	40.4	48.0	26.9	Swivel	Female	24.1	30.7	36.3	17.5	2.8	45.7	45.7	9.7	4.3	71.4	66.0	4.3
042-049	in.	25.6	31.6	54.4	2.3	7.3	15.9	18.9	10.6	1 in.	1/2 in.	9.5	12.1	14.3	6.9	1.1	18.0	18.0	3.8	1.7	28.1	30.0	1.7
	cm.	65.0	80.3	138.2	5.8	18.5	40.4	48.0	26.9	Swivel	Female	24.1	30.7	36.3	17.5	2.8	45.7	45.7	9.7	4.3	71.4	76.2	4.3
060-072	in.	25.6	31.6	58.4	2.3	7.3	15.9	18.9	10.6	1 in.	1/2 in.	9.5	12.1	14.3	6.9	1.1	18.0	18.0	3.8	1.7	28.1	34.0	1.7
	cm.	65.0	80.3	148.3	5.8	18.5	40.4	48.0	26.9	Swivel	Female	24.1	30.7	36.3	17.5	2.8	45.7	45.7	9.7	4.3	71.4	86.4	4.3

Condensate is 3/4 in. PVC female glue socket and is switchable from side to front 7/11/12

Unit shipped with deluxe 2 in. (field adjustable to 1 in.) duct collar/filter rack extending from unit 3.25 in. and is suitable for duct connection.

Discharge flange is field installed and extends 1 in. [25.4 mm] from cabinet

Decorative molding and/or water connections extend 1.2 in. [30.5 mm] beyond front of cabinet.

Top panel has 1.375 in. and 1.125 in. knockouts for electrical connections.

WaterFurnace works continually to improve its products. As a result, the design and specifications of each product at the time of order may be changed without notice. Please contact WaterFurnace at 1-888-929-2837 for latest design and specifications. Purchaser's approval of this data set signifies that the equipment is acceptable under the provisions of the job specification. Statements and other information contained herein are not express warranties and do not form the basis of any bargain between the parties, but are merely WaterFurnace's opinion or commendation of its products. The latest version of this document is available at www.waterfurnace.com.

Contractor: _____ P.O.: _____

Engineer: _____

Project Name: _____ Unit Tag: _____

Vertical Dimensional Data cont.

Bottom Air Discharge

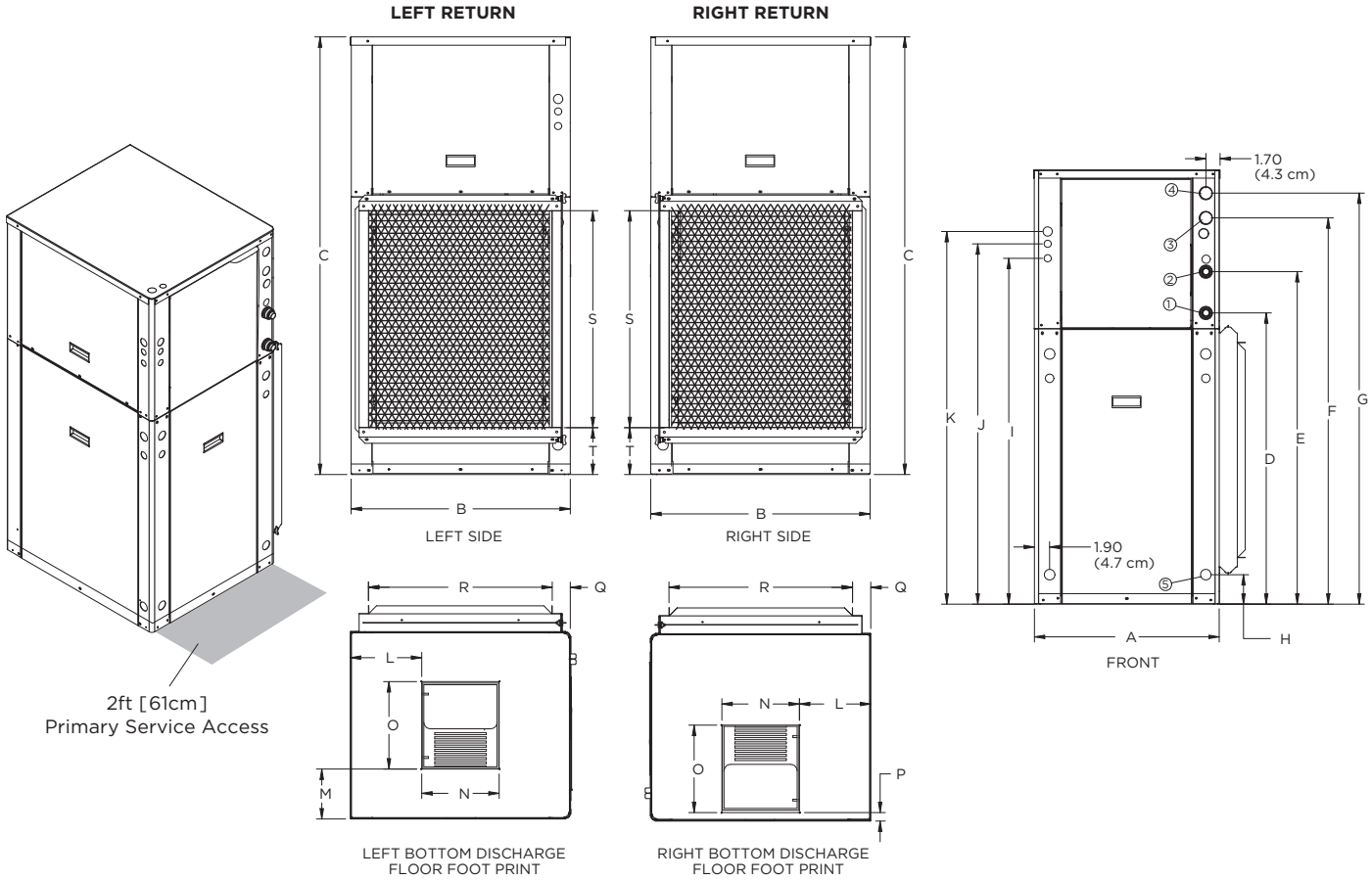

Bottom Flow Models		Overall Cabinet			Water Connections							Electrical Knockouts			Discharge Connection duct flange installed (±0.10 in)					Return Connection using std deluxe filter rack (±0.10 in)			
					1	2	3	4	5			I 3/4 in. cond	J 1/2 in. cond	K 1/2 in. cond									
		A	B	C	D	E	F	G	H	Loop Water FPT	HWG Sweat (I.D.)	Power Supply	Ext Pump	Low Voltage	L	M	N	O	P	Q	R	S	T
		Width	Depth	Height	In	Out	HWG In	HWG Out	Con-densate								Supply Width	Supply Depth			Return Depth	Return Height	
022-030	in.	22.5	26.5	52.5	35.3	40.2	46.7	49.7	3.6	1 in. Swivel	1/2 in. Female	41.9	43.6	45.1	8.6	6.0	9.3	10.5	1.0	2.2	22.2	26.0	5.6
	cm.	57.2	67.3	133.4	89.7	102.1	118.6	126.2	9.1			106.4	110.7	114.6	21.8	15.2	23.6	26.7	2.5	5.6	56.4	66.0	14.2
036-072	in.	25.5	31.5	62.5	43.4	48.4	57.0	60.0	3.6	1 in. Swivel	1/2 in. Female	48.9	50.8	52.2	9.1	4.8	13.4	13.6	1.5	1.8	28.1	34.0	5.6
	cm.	64.8	80.0	158.8	110.2	122.9	144.8	152.4	9.1			124.2	129.0	132.6	23.1	12.2	34.0	34.5	3.8	4.6	71.4	86.4	14.2

Condensate is 3/4 in. PVC female glue socket and is switchable from side to front 7/11/12
Vertical bottom flow unit shipped with deluxe 2 in. (field adjustable to 1 in.) duct collar/filter rack extending from unit 3.25 in. and is suitable for duct connection.
Water connections extend 1.2 in. (30.5mm) beyond front of cabinet.
Top panel has 1.375 in. and 1.125 in. knockouts for electrical connections.

WaterFurnace works continually to improve its products. As a result, the design and specifications of each product at the time of order may be changed without notice. Please contact WaterFurnace at 1-888-929-2837 for latest design and specifications. Purchaser's approval of this data set signifies that the equipment is acceptable under the provisions of the job specification. Statements and other information contained herein are not express warranties and do not form the basis of any bargain between the parties, but are merely WaterFurnace's opinion or commendation of its products. The latest version of this document is available at www.waterfurnace.com.

Vertical Dimensional Data cont.

Rear Air Discharge

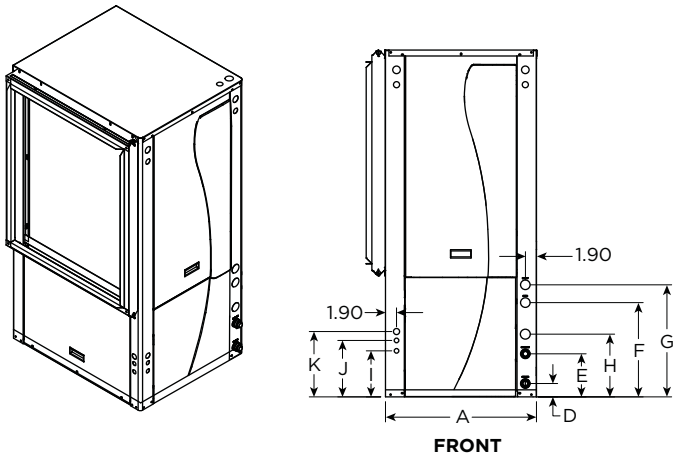

FRONT

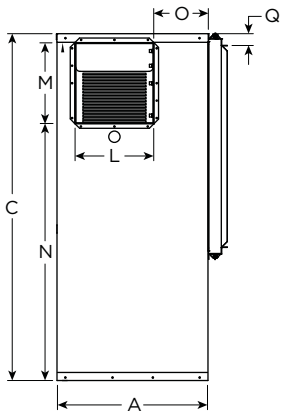

REAR VIEW
LEFT RETURN

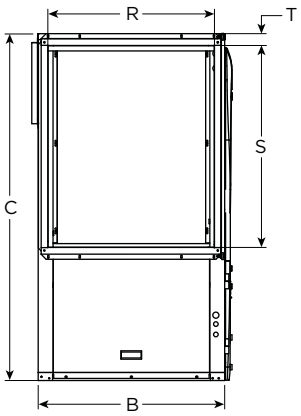

SIDE VIEW
LEFT RETURN

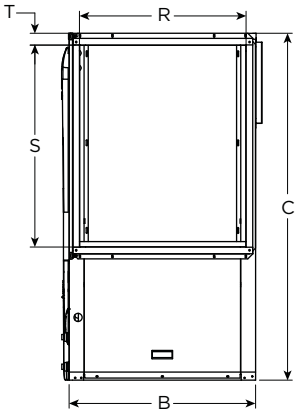

SIDE VIEW
RIGHT RETURN

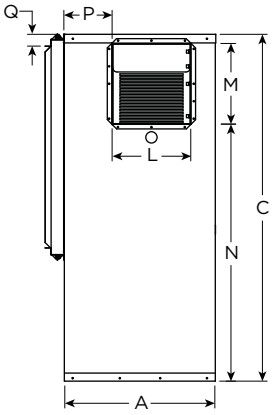

REAR VIEW
RIGHT RETURN

Vertical Rear Discharge Models		Overall Cabinet			Water Connections							Electrical Connections			Discharge Connection duct flange installed (±0.10 in)					Return Connection using std deluxe filter rack (±0.10 in)			
		A	B	C	D	E	F	G	H	Loop Water FPT	HWG Sweat (I.D.)	I 3/4 in. cond	J 1/2 in. cond	K 1/2 in. cond	L	M	N	O	P	Q	R	S	T
		Width	Depth	Height	Loop In	Loop Out	HWG In	HWG Out	Condensate			Power Supply	Ext Pump	Low Voltage	Supply Width	Supply Depth					Return Depth	Return Height	
042-049	in.	25.6	31.6	54.4	2.3	7.3	15.9	18.9	10.6	1" Swivel	1/2" female	9.5	12.1	14.3	13.3	13.6	39.4	9.1	8.1	1.7	28.1	30.0	1.7
	cm.	65.0	80.3	138.2	5.8	18.5	40.4	48.0	26.9			24.1	30.7	36.3	33.8	34.5	100.1	23.1	20.6	4.3	71.4	76.2	4.3
060-072	in.	25.6	31.6	58.4	2.3	7.3	15.9	18.9	10.6	1" Swivel	1/2" female	9.5	12.1	14.3	13.3	13.6	43.4	9.1	8.1	1.7	28.1	34.0	1.7
	cm.	65.0	80.3	148.3	5.8	18.5	40.4	48.0	26.9			24.1	30.7	36.3	33.8	34.5	110.2	23.1	20.6	4.3	71.4	86.4	4.3

Condensate is 3/4 in. PVC female glue socket and is switchable from side to front 7/11/12
Unit shipped with deluxe 2 in. (field adjustable to 1 in.) duct collar/filter rack extending from unit 3.25 in. and is suitable for duct connection.
Discharge flange is field installed and extends 1 in. [25.4mm] from cabinet
Decorative molding and water connections extend 1.2 in. [30.5mm] beyond front of cabinet.
Top panel has 1.375 in. and 1.125 in. knockouts for electrical connections.

WaterFurnace works continually to improve its products. As a result, the design and specifications of each product at the time of order may be changed without notice. Please contact WaterFurnace at 1-888-929-2837 for latest design and specifications. Purchaser's approval of this data set signifies that the equipment is acceptable under the provisions of the job specification. Statements and other information contained herein are not express warranties and do not form the basis of any bargain between the parties, but are merely WaterFurnace's opinion or commendation of its products. The latest version of this document is available at www.waterfurnace.com.

Contractor: _____ P.O.: _____

Engineer: _____

Project Name: _____ Unit Tag: _____

5 Series 500A11
1-6 Ton 60Hz

WaterFurnace® Smarter from the Ground Up™

Horizontal Dimensional Data

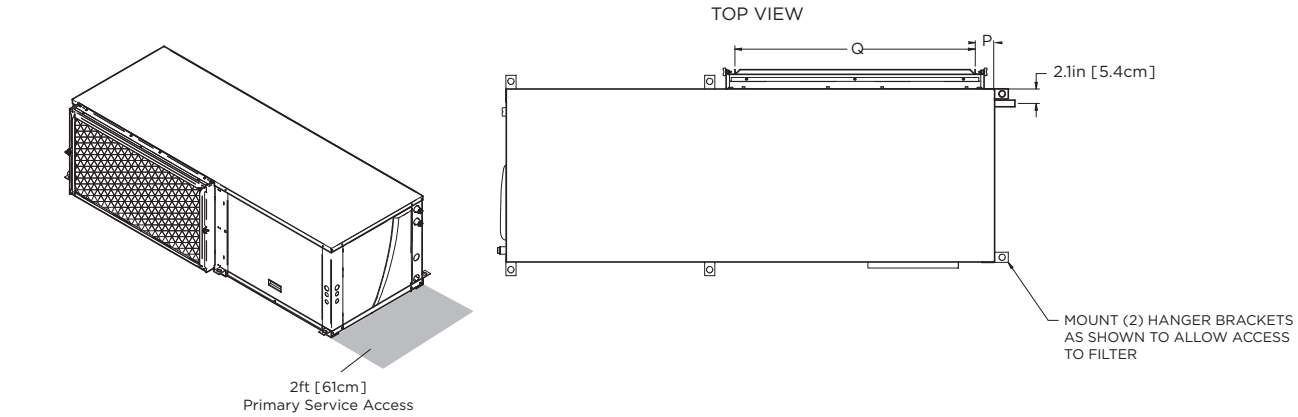

AS SHOWN LR UNIT (RR UNIT ON OPPOSITE SIDE—SAME DIMENSIONS)

Horizontal Model		Overall Cabinet			Water Connections							Electrical Connections			Discharge Connection duct flange installed (±0.10 in)				Return Connection using std deluxe filter rack (±0.10 in)			
		A	B	C	D	E	F	G	H	Loop Water FPT	HWG Sweat (I.D.)	I 3/4 in. cond	J 1/2 in. cond	K 1/2 in. cond	L	M	N	O	P	Q	R	S
		Width	Depth	Height	In	Out	HWG In	HWG Out	Cond-ensate			Power Supply	Ext Pump	Low Voltage		Supply Height	Supply Depth			Return Depth	Return Height	
012	in.	22.5	44.0	17.3	2.3	5.3	11.9	14.9	8.0	1 in. Swivel	1/2 in. Female	6.9	9.5	11.7	4.1	7.3	9.7	5.8	1.7	17.8	14.6	1.4
	cm.	57.2	111.8	43.9	5.8	13.5	30.2	37.8	20.3			17.5	24.1	29.7	10.4	18.5	24.6	14.7	4.3	45.2	37.1	3.6
018	in.	22.5	53.0	19.3	2.3	5.3	13.8	16.8	8.0	1 in. Swivel	1/2 in. Female	6.9	9.5	11.7	1.8	10.5	9.5	8.2	2.2	21.8	16.5	1.5
	cm.	57.2	134.6	49.0	5.8	13.5	35.1	42.7	20.3			17.5	24.1	29.7	4.6	26.7	24.1	20.8	5.6	55.4	41.9	3.8
022-030	in.	22.5	63.0	19.3	2.0	7.0	13.5	16.5	0.8	1 in. Swivel	1/2 in. Female	9.5	12.1	14.3	2.3	10.5	9.4	5.8	2.8	30.5	16.9	1.3
	cm.	57.2	160.0	49.0	5.1	17.8	34.3	41.9	2.0			24.1	30.7	36.3	5.8	26.7	23.9	14.7	7.1	77.5	42.9	3.3
036-038	in.	25.6	72.0	21.3	2.3	7.3	15.9	18.9	0.8	1 in. Swivel	1/2 in. Female	9.5	12.1	14.3	SEE CHART	13.6	13.2	SEE CHART	2.8	35.5	18.9	1.3
	cm.	65.0	182.9	54.1	5.8	18.5	40.4	48.0	2.0			24.1	30.7	36.3		34.5	33.5		7.1	90.2	48.0	3.3
042-049	in.	25.6	77.0	21.3	2.3	7.3	15.9	18.9	0.8	1 in. Swivel	1/2 in. Female	9.5	12.1	14.3	SEE CHART	13.6	13.2	SEE CHART	2.8	40.4	18.9	1.3
	cm.	65.0	195.6	54.1	5.8	18.5	40.4	48.0	2.0			24.1	30.7	36.3		34.5	33.5		7.1	102.6	48.0	3.3
060-072	in.	25.6	82.0	21.3	2.3	7.3	15.9	18.9	0.8	1 in. Swivel	1/2 in. Female	9.5	12.1	14.3	SEE CHART	13.6	13.2	SEE CHART	2.8	45.4	18.9	1.3
	cm.	65.0	208.3	54.1	5.8	18.5	40.4	48.0	2.0			24.1	30.7	36.3		34.5	33.5		7.1	115.3	48.0	3.3

Condensate is 3/4 in. PVC female glue socket and is switchable from side to front 7/11/12
Unit shipped with deluxe 2 in. (field adjustable to 1 in.) duct collar/filter rack extending from unit 3.25 in. and is suitable for duct connection.
Discharge flange is field installed and extends 1 in. [25.4mm] from cabinet
Decorative molding and/or water connections extend 1.2 in. [30.5mm] beyond front of cabinet.

Units Not Shown Above		L	O
Right Return End Discharge	in	2.8	4.6
	cm	7.1	11.8
Right Return Side Discharge	in	4.9	6.9
	cm	12.4	17.5
Left Return End Discharge	in	4.9	7.6
	cm	12.4	19.4
Left Return Side Discharge	in	2.8	6.9
	cm	7.1	17.5

WaterFurnace works continually to improve its products. As a result, the design and specifications of each product at the time of order may be changed without notice. Please contact WaterFurnace at 1-888-929-2837 for latest design and specifications. Purchaser's approval of this data set signifies that the equipment is acceptable under the provisions of the job specification. Statements and other information contained herein are not express warranties and do not form the basis of any bargain between the parties, but are merely WaterFurnace's opinion or commendation of its products. The latest version of this document is available at www.waterfurnace.com.

Contractor: _____ P.O.: _____

Engineer: _____

Project Name: _____ Unit Tag: _____

Physical Data

Single Speed

Model		SINGLE SPEED								
		012	**018**	**022**	**030**	**036**	**042**	**048**	**060**	**070**
Compressor (1 each)		Rotary		Scroll						
Factory Charge R410a, oz [kg] (Aluminum tube and fin air coil)	Vertical	36 [1.02]	42 [1.19]	56 [1.58]	64 [1.81]	82 [2.32]	84 [2.38]	92 [2.60]	112 [3.17]	134 [3.79]
Factory Charge R410a, oz [kg] (Aluminum tube and fin air coil)	Horizontal	36 [1.02]	42 [1.19]	54 [1.53]	64 [1.81]	76 [2.15]	84 [2.38]	92 [2.60]	88 [2.49]	110 [3.11]
Blower Motor & Blower										
Blower Motor Type/Speeds	VS ECM	n/a	Variable Speed ECM							
	5-Spd ECM	n/a	n/a	5 Speed ECM						
	PSC	PSC - 4 Speeds	PSC - 3 Speeds							
Blower Motor- hp [W]	VS ECM	n/a	1/2 [373]	1/2 [373]	1/2 [373]	1/2 [373]	1/2 [373]	1/2 [373]	1 [746]	1 [746]
	5-Spd ECM	n/a	n/a	1/2 [373]	1/2 [373]	1/2 [373]	1 [746]	1 [746]	1 [746]	1 [746]
	PSC	1/10 [75]	1/6 [134]	1/5 [149]	1/3 [249]	1/2 [373]	1/2 [373]	1/2 [373]	1 [746]	1 [746]
High Static Blower Motor - hp [W]	VS ECM	n/a	n/a	n/a	n/a	1 [746]	1 [746]	1 [746]	n/a	n/a
	PSC	n/a	n/a	1/ [249]	1/3 [249]	1/2 [373]	3/4 [560]	3/4 [560]	n/a	n/a
Blower Wheel Size (Dia x W), in. [mm]	VS ECM & 5-Spd ECM	n/a	9 x 7 [229 x 178]	9 x 7 [229 x 178]	9 x 7 [229 x 178]	11 x 10 [279 x 254]	11 x 10 [279 x 254]	11 x 10 [279 x 254]	11 x 10 [279 x 254]	11 x 10 [279 x 254]
	PSC	6 x 8 [152 x 203]	9 x 7 [229 x 178]	9 x 7 [229 x 178]	9 x 7 [229 x 178]	10 x 10 [254 x 254]	10 x 10 [254 x 254]	10 x 10 [254 x 254]	11 x 10 [279 x 254]	11 x 10 [279 x 254]
High Static Blower Wheel Size (Dia x W), in. [mm]	VS ECM	n/a	n/a	n/a	n/a	11 x 10 [279 x 254]	11 x 10 [279 x 254]	11 x 10 [279 x 254]	n/a	n/a
	PSC	n/a	n/a	9 x 7 [229 x 178]	9 x 7 [229 x 178]	10 x 10 [254 x 254]	10 x 10 [254 x 254]	10 x 10 [254 x 254]	n/a	n/a
Coax and Water Piping										
Water Connections Size - Swivel - in [mm]		1" [25.4]	1" [25.4]	1" [25.4]	1" [25.4]	1" [25.4]	1" [25.4]	1" [25.4]	1" [25.4]	1" [25.4]
HWG Connection Size - Female Sweat I.D. - in [mm]		n/a	1/2" [12.7]	1/2" [12.7]	1/2" [12.7]	1/2" [12.7]	1/2" [12.7]	1/2" [12.7]	1/2" [12.7]	1/2" [12.7]
Coax & Piping Water Volume - gal [l]		0.35 [1.3]	0.40 [1.5]	0.7 [2.6]	1.0 [3.8]	1.3 [4.9]	1.3 [4.9]	1.6 [6.1]	1.6 [6.1]	2.3 [8.7]
Vertical										
Air Coil Dimensions (H x W), in. [mm]		16 x 16 [406 x 406]	19 x 20 [483 x 508]	24 x 20 [610 x 542]	28 x 20 [711 x 542]	28 x 25 [711 x 635]	32 x 25 [813 x 635]	32 x 25 [813 x 635]	36 x 25 [914 x 635]	36 x 25 [914 x 635]
Air Coil Total Face Area, ft2 [m2]		1.8 [0.167]	2.6 [0.242]	3.3 [0.310]	3.9 [0.362]	4.9 [0.451]	5.6 [0.570]	5.6 [0.570]	6.3 [0.641]	6.3 [0.641]
Air Coil Tube Size, in [mm]		3/8 [9.5]	5/16 [7.9]	3/8 [9.5]	3/8 [9.5]	3/8 [9.5]	3/8 [9.5]	3/8 [9.5]	3/8 [9.5]	3/8 [9.5]
Air Coil Number of rows		3	3	3	3	3	3	3	4	4
Filter Standard - 2" [51mm] Pleated MERV11 Throwaway, in [mm]		16 x 20 [406 x 508]	20 x 24 [508 x 610]	28 x 24 [712 x 610]	28 x 24 [712 x 610]	28 x 30 [712 x 762]	32 x 30 [813 x 762]	32 x 30 [813 x 762]	36 x 30 [914 x 762]	36 x 30 [914 x 762]
Weight - Operating, lb [kg]		165 [75]	200 [91]	293 [133]	308 [140]	353 [160]	368 [167]	408 [185]	443 [201]	468 [212]
Weight - Packaged, lb [kg]		185 [84]	220 [100]	313 [142]	328 [149]	373 [169]	388 [176]	428 [194]	463 [210]	488 [221]
Horizontal										
Air Coil Dimensions (H x W), in. [mm]		16 x 16 [406 x 406]	18 x 21 [457 x 533]	18 x 27 [457 x 686]	18 x 30 [457 x 762]	20 x 35 [508 x 889]	20 x 40 [508 x 1016]	20 x 40 [508 x 1016]	20 x 45 [508 x 1143]	20 x 45 [508 x 1143]
Air Coil Total Face Area, ft2 [m2]		1.8 [0.167]	2.6 [0.242]	3.4 [0.316]	3.9 [0.362]	4.9 [0.451]	5.6 [0.570]	5.6 [0.570]	6.3 [0.641]	6.3 [0.641]
Air Coil Tube Size, in [mm]		3/8 [9.5]	5/16 [7.9]	3/8 [9.5]	3/8 [9.5]	3/8 [9.5]	3/8 [9.5]	3/8 [9.5]	3/8 [9.5]	3/8 [9.5]
Air Coil Number of rows		3	3	3	3	3	3	3	3	3
Filter Standard - 2" [51mm] Pleated MERV11 Throwaway, in [mm]		1 - 16 x 20 [406 x 508]	1 - 18 x 24 [457 x 610]	1 - 18 x 32 [457 x 813]	1 - 18 x 32 [457 x 813]	1 - 20 x 37 [686 x 940]	1 - 20 x 20 [508 x 508] 1 - 20 x 22 [508 x 559]	1 - 20 x 20 [508 x 508] 1 - 20 x 22 [508 x 559]	1 - 20 x 25 [508 x 635] 1 - 20 x 22 [508 x 559]	1 - 20 x 25 [508 x 635] 1 - 20 x 22 [508 x 559]
Weight - Operating, lb [kg]		165 [75]	200 [91]	300 [136]	315 [143]	368 [167]	403 [183]	418 [190]	453 [205]	478 [217]
Weight - Packaged, lb [kg]		185 [84]	220 [100]	320 [145]	335 [152]	388 [176]	423 [192]	438 [199]	473 [215]	498 [226]

11/13/2017

WaterFurnace works continually to improve its products. As a result, the design and specifications of each product at the time of order may be changed without notice. Please contact WaterFurnace at 1-888-929-2837 for latest design and specifications. Purchaser's approval of this data set signifies that the equipment is acceptable under the provisions of the job specification. Statements and other information contained herein are not express warranties and do not form the basis of any bargain between the parties, but are merely WaterFurnace's opinion or commendation of its products. The latest version of this document is available at www.waterfurnace.com.

Contractor: _____ P.O.: _____

Engineer: _____

Project Name: _____ Unit Tag: _____

Physical Data cont.

Dual Capacity

Model		DUAL CAPACITY				
		ND026	**ND038**	**ND049**	**ND064**	**ND072**
Compressor (1 each)		Copeland UltraTech, Dual Capacity Scroll				
Factory Charge R410a, oz [kg] (Aluminum tube and fin air coil)	Vertical	56 [1.58]	70 [1.98]	93 [2.63]	112 [3.17]	130 [3.68]
Factory Charge R410a, oz [kg] (Aluminum tube and fin air coil)	Horizontal	58 [1.64]	76 [2.15]	93 [2.63]	112 [3.17]	136 [3.85]
ECM Blower Motor & Blower						
Blower Motor Type/Speeds	VS ECM	Variable Speed ECM				
	5-Spd ECM	5 Speed ECM				
Blower Motor- hp [W]	VS ECM	1/2 [373]	1/2 [373]	1/2 [373]	1 [746]	1 [746]
	5-Spd ECM	1/2 [373]	1/2 [373]	1 [746]	1 [746]	1 [746]
High Static Blower Motor - hp [W]	VS ECM	n/a	1 [746]	1 [746]	n/a	n/a
Blower Wheel Size (Dia x W), in. [mm]	VS ECM	9 x 7 [229 x 178]	11 x 10 [279 x 254]	11 x 10 [279 x 254]	11 x 10 [279 x 254]	11 x 10 [279 x 254]
	5-Spd ECM	9 x 7 [229 x 178]	11 x 10 [279 x 254]	11 x 10 [279 x 254]	11 x 10 [279 x 254]	11 x 10 [279 x 254]
High Static Blower Wheel Size - [Dia. x W], in. [mm]	VS ECM	n/a	11 x 10 [279 x 254]	11 x 10 [279 x 254]	n/a	n/a
Coax and Water Piping						
Water Connections Size - Swivel - in [mm]		1" [25.4]	1" [25.4]	1" [25.4]	1" [25.4]	1" [25.4]
HWG Connection Size - Female Sweat I.D. - in [mm]		1/2" [12.7]	1/2" [12.7]	1/2" [12.7]	1/2" [12.7]	1/2" [12.7]
Coax & Piping Water Volume - gal [l]		0.7 [2.6]	1.3 [4.9]	1.6 [6.1]	1.6 [6.1]	2.3 [8.7]
Vertical						
Air Coil Dimensions (H x W), in. [mm]		24 x 20 [610 x 542]	28 x 25 [711 x 635]	32 x 25 [813 x 635]	36 x 25 [914 x 635]	36 x 25 [914 x 635]
Air Coil Total Face Area, ft2 [m2]		3.3 [0.310]	4.9 [0.451]	5.6 [0.570]	6.3 [0.641]	6.3 [0.641]
Air Coil Tube Size, in [mm]		3/8 [9.5]	3/8 [9.5]	3/8 [9.5]	3/8 [9.5]	3/8 [9.5]
Air Coil Number of rows		3	3	3	4	4
Filter Standard - 2" [51mm] Pleated MERV11 Throwaway, in [mm]		28 x 24 [712 x 610]	28 x 30 [712 x 762]	32 x 30 [813 x 762]	36 x 30 [914 x 762]	36 x 30 [914 x 762]
Weight - Operating, lb [kg]		293 [133]	358 [162]	408 [185]	453 [205]	468 [212]
Weight - Packaged, lb [kg]		313 [142]	378 [172]	428 [194]	473 [215]	488 [221]
Horizontal						
Air Coil Dimensions (H x W), in. [mm]		18 x 27 [457 x 686]	20 x 35 [508 x 889]	20 x 40 [508 x 1016]	20 x 45 [508 x 1143]	20 x 45 [508 x 1143]
Air Coil Total Face Area, ft2 [m2]		3.4 [0.316]	4.9 [0.451]	5.6 [0.570]	6.3 [0.641]	6.3 [0.641]
Air Coil Tube Size, in [mm]		3/8 [9.5]	3/8 [9.5]	3/8 [9.5]	3/8 [9.5]	3/8 [9.5]
Air Coil Number of rows		3	3	3	4	4
Filter Standard - 2" [51mm] Pleated MERV11 Throwaway, in [mm]		1 - 18 x 32 [457 x 813]	1 - 20 x 37 [686 x 940]	1 - 20 x 20 [508 x 508] 1 - 20 x 22 [508 x 559]	1 - 20 x 25 [508 x 635] 1 - 20 x 22 [508 x 559]	1 - 20 x 25 [508 x 635] 1 - 20 x 22 [508 x 559]
Weight - Operating, lb [kg]		300 [136]	368 [167]	418 [190]	463 [210]	480 [218]
Weight - Packaged, lb [kg]		320 [145]	388 [176]	438 [199]	483 [219]	500 [227]

11/13/2017

WaterFurnace works continually to improve its products. As a result, the design and specifications of each product at the time of order may be changed without notice. Please contact WaterFurnace at 1-888-929-2837 for latest design and specifications. Purchaser's approval of this data set signifies that the equipment is acceptable under the provisions of the job specification. Statements and other information contained herein are not express warranties and do not form the basis of any bargain between the parties, but are merely WaterFurnace's opinion or commendation of its products. The latest version of this document is available at www.waterfurnace.com.

Auxiliary Heat Ratings

Model	kW		Stages	Btu/h		Min cfm	Model Size Compatibility					
	208V	230V		208V	230V		012	018	022	026 - 030	036 - 042	048 - 072
EAS(H)4*	2.9	3.8	1	9,700	12,900	250	•					
EAM(H)5*	3.6	4.8	1	12,300	16,300	450		•	•	•		
EAM(H)8*	5.7	7.6	2	19,400	25,900	550		•	•	•		
EAM(H)10*	7.2	9.6	2	24,600	32,700	650				•		
EAL(H)10*	7.2	9.6	2	24,600	32,700	1100					•	•
EAL(H)15*	10.8	14.4	3	36,900	49,100	1250					•	•
EAL(H)20*	14.4	19.2	4	49,200	65,500	1500						•

Order the "H" part number when installed on horizontal and vertical rear discharge units
Air flow level for auxiliary heat (Aux) must be above the minimum cfm in this table

11/17/2014

Auxiliary Heat Electrical Data

Model	Supply Circuit	Heater Amps		Min Circuit Amp		Fuse (USA)		Fuse (CAN)		CKT BRK	
		208 V	240 V	208 V	240 V	208 V	240 V	208 V	240 V	208 V	240 V
EAS(H)4*	Single	13.7	15.8	17.9	20.5	20	20	20	20	20	20
EAM(H)5*	Single	17.3	20.0	26.7	30.0	30	30	30	30	30	30
EAM(H)8*	Single	27.5	31.7	39.3	44.6	40	45	40	45	40	45
EAM(H)10*	Single	34.7	40.0	48.3	55.0	50	60	50	60	50	60
EAL(H)10*	Single	34.7	40.0	53.3	60.0	60	60	60	60	60	60
EAL(H)15*	Single	52.0	60.0	75.0	85.0	80	90	80	90	70	100
	L1/L2	34.7	40.0	53.3	60.0	60	60	60	60	60	60
	L3/L4	17.3	20.0	21.7	25.0	25	25	25	25	20	30
EAL(H)20*	Single	69.3	80.0	96.7	110.0	100	110	100	110	100	100
	L1/L2	34.7	40.0	53.3	60.0	60	60	60	60	60	60
	L3/L4	34.7	40.0	43.3	50.0	45	50	45	50	40	50

All heaters rated single phase 60 cycle and include unit blower load
All fuses type "D" time delay (or HACR circuit breaker in USA)
Supply wire size to be determined by local codes

11/17/2014

WaterFurnace works continually to improve its products. As a result, the design and specifications of each product at the time of order may be changed without notice. Please contact WaterFurnace at 1-888-929-2837 for latest design and specifications. Purchaser's approval of this data set signifies that the equipment is acceptable under the provisions of the job specification. Statements and other information contained herein are not express warranties and do not form the basis of any bargain between the parties, but are merely WaterFurnace's opinion or commendation of its products. The latest version of this document is available at www.waterfurnace.com.

Contractor: _____ P.O.: _____

Engineer: _____

Project Name: _____ Unit Tag: _____

Electrical Data

Single Speed Unit with Variable Speed ECM Motor

Model	Rated Voltage	Voltage Min/Max	Compressor				HWG Pump FLA	Ext Loop FLA	Blower Motor FLA	Total Unit FLA	Min Circ Amp	Max Fuse/ HACR
			MCC	RLA	LRA	LRA**						
018	208-230/60/1	187/253	10.4	6.7	33.5	n/a	0.4	5.4	4.0	16.5	18.1	20
022	208-230/60/1	187/253	14.0	9.0	48.0	17.0	0.4	5.4	4.0	18.8	21.0	30
030	208-230/60/1	187/253	20.0	12.8	58.3	21.0	0.4	5.4	4.0	22.6	25.8	35
036	208-230/60/1	187/253	22.0	14.1	73.0	26.0	0.4	5.4	4.0	23.9	27.4	40
036*	208-230/60/1	187/253	22.0	14.1	73.0	26.0	0.4	5.4	7.0	26.9	30.4	40
042	208-230/60/1	187/253	26.0	16.6	79.0	28.0	0.4	5.4	4.0	26.4	30.6	45
042*	208-230/60/1	187/253	26.0	16.6	79.0	28.0	0.4	5.4	7.0	29.4	33.6	50
048	208-230/60/1	187/253	31.0	19.8	109.0	38.0	0.4	5.4	4.0	29.6	34.6	50
048*	208-230/60/1	187/253	31.0	19.8	109.0	38.0	0.4	5.4	7.0	32.6	37.6	50
060	208-230/60/1	187/253	41.2	26.4	134.0	47.0	0.4	5.4	7.0	39.2	45.8	70
070	208-230/60/1	187/253	44.2	28.3	178.0	63.0	0.4	5.4	7.0	41.1	48.2	70

4/6/12

* With optional 1 hp ECM motor
** With optional IntelliStart®
Rated voltage of 208/230/60/1
All fuses Class RK-5
HACR circuit breaker in USA only

Single Speed Unit with 5-Speed ECM Motor

Model	Rated Voltage	Voltage Min/Max	Compressor				HWG Pump FLA	Ext Loop FLA	Blower Motor FLA	Total Unit FLA	Min Circ Amp	Max Fuse/ HACR
			MCC	RLA	LRA	LRA**						
022	208-230/60/1	187/253	14.0	9.0	48.0	17.0	0.4	5.4	4.1	18.9	21.1	30
030	208-230/60/1	187/253	20.0	12.8	58.3	21.0	0.4	5.4	4.1	22.7	25.9	35
036	208-230/60/1	187/253	22.0	14.1	73.0	26.0	0.4	5.4	4.1	24.0	27.5	40
042	208-230/60/1	187/253	26.0	16.6	79.0	28.0	0.4	5.4	7.6	30.0	34.2	50
048	208-230/60/1	187/253	31.0	19.8	109.0	38.0	0.4	5.4	7.6	33.2	38.2	50
060	208-230/60/1	187/253	41.2	26.4	134.0	47.0	0.4	5.4	7.6	39.8	46.4	70
070	208-230/60/1	187/253	44.2	28.3	178.0	63.0	0.4	5.4	7.6	41.7	48.8	70

4/6/12

** With optional IntelliStart®
Rated voltage of 208/230/60/1
All fuses Class RK-5
HACR circuit breaker in USA only

Single Speed Unit with PSC Motor

Model	Rated Voltage	Voltage Min/Max	Compressor				HWG Pump FLA	Ext Loop FLA	Blower Motor FLA	Total Unit FLA	Min Circ Amp	Max Fuse/ HACR
			MCC	RLA	LRA	LRA**						
012	208-230/60/1	187/253	7.7	4.9	25.0	n/a	-	5.4	0.6	10.9	12.2	15
018	208-230/60/1	187/253	10.4	6.7	33.5	n/a	0.4	5.4	1.1	13.6	15.2	20
022	208-230/60/1	187/253	14.0	9.0	48.0	17.0	0.4	5.4	1.2	16.0	18.2	25
022*	208-230/60/1	187/253	14.0	9.0	48.0	17.0	0.4	5.4	1.5	16.3	18.5	25
030	208-230/60/1	187/253	20.0	12.8	58.3	21.0	0.4	5.4	1.5	20.1	23.3	35
030*	208-230/60/1	187/253	20.0	12.8	58.3	21.0	0.4	5.4	2.8	21.4	24.6	35
036	208-230/60/1	187/253	22.0	14.1	73.0	26.0	0.4	5.4	2.8	22.7	26.2	40
036*	208-230/60/1	187/253	22.0	14.1	73.0	26.0	0.4	5.4	3.5	23.4	26.9	40
042	208-230/60/1	187/253	26.0	16.6	79.0	28.0	0.4	5.4	3.5	25.9	30.1	45
042*	208-230/60/1	187/253	26.0	16.6	79.0	28.0	0.4	5.4	4.6	27.0	31.2	45
048	208-230/60/1	187/253	31.0	19.8	109.0	38.0	0.4	5.4	3.5	29.1	34.1	50
048*	208-230/60/1	187/253	31.0	19.8	109.0	38.0	0.4	5.4	4.6	30.2	35.2	50
060	208-230/60/1	187/253	41.2	26.4	134.0	47.0	0.4	5.4	5.9	38.1	44.7	70
070	208-230/60/1	187/253	44.2	28.3	158.0	63.0	0.4	5.4	5.9	41.8	49.3	70

4/6/12

* With optional high static motor
** With optional IntelliStart®
Rated voltage of 208/230/60/1
All fuses Class RK-5
HACR circuit breaker in USA only

WaterFurnace works continually to improve its products. As a result, the design and specifications of each product at the time of order may be changed without notice. Please contact WaterFurnace at 1-888-929-2837 for latest design and specifications. Purchaser's approval of this data set signifies that the equipment is acceptable under the provisions of the job specification. Statements and other information contained herein are not express warranties and do not form the basis of any bargain between the parties, but are merely WaterFurnace's opinion or commendation of its products. The latest version of this document is available at www.waterfurnace.com.

Electrical Data cont.

Dual Capacity Unit with Variable Speed ECM Motor

Model	Rated Voltage	Voltage Min/Max	Compressor				HWG Pump FLA	Ext Loop FLA	Blower Motor FLA	Total Unit FLA	Min Circ Amp	Max Fuse/ HACR
			MCC	RLA	LRA	LRA**						
026	208-230/60/1	187/253	18.2	11.6	58.3	21.0	0.4	5.4	4.0	21.4	24.4	35
038	208-230/60/1	187/253	23.8	15.2	83.0	30.0	0.4	5.4	4.0	25.0	28.8	40
038*	208-230/60/1	187/253	23.8	15.2	83.0	30.0	0.4	5.4	7.0	28.0	31.8	50
049	208-230/60/1	187/253	33.0	21.1	104.0	37.0	0.4	5.4	4.0	30.9	36.2	50
049*	208-230/60/1	187/253	33.0	21.1	104.0	37.0	0.4	5.4	7.0	33.9	39.2	60
064	208-230/60/1	187/253	42.3	27.1	152.9	54.0	0.4	5.4	7.0	39.9	46.6	70
072	208-230/60/1	187/253	46.3	29.6	179.2	63.0	0.4	5.4	7.0	42.4	49.8	70

9/1/2015

* With optional 1 hp ECM motor
** With optional IntelliStart®
Rated voltage of 208/230/60/1
All fuses Class RK-5
HACR circuit breaker in USA only

Dual Capacity Unit with 5-Speed ECM Motor

Model	Rated Voltage	Voltage Min/Max	Compressor				HWG Pump FLA	Ext Loop FLA	Blower Motor FLA	Total Unit FLA	Min Circ Amp	Max Fuse/ HACR
			MCC	RLA	LRA	LRA**						
026	208-230/60/1	187/253	18.2	11.6	58.3	21.0	0.4	5.4	4.1	21.5	24.5	35
038	208-230/60/1	187/253	23.8	15.2	83.0	30.0	0.4	5.4	4.1	25.1	28.9	40
049	208-230/60/1	187/253	33.0	21.1	104.0	37.0	0.4	5.4	7.6	34.5	39.8	60
064	208-230/60/1	187/253	42.3	27.1	152.9	54.0	0.4	5.4	7.6	40.5	47.2	70
072	208-230/60/1	187/253	46.3	29.6	179.2	63.0	0.4	5.4	7.6	43.0	50.4	80

9/1/15

** With optional IntelliStart®
Rated voltage of 208/230/60/1
All fuses Class RK-5
HACR circuit breaker in USA only

WaterFurnace works continually to improve its products. As a result, the design and specifications of each product at the time of order may be changed without notice. Please contact WaterFurnace at 1-888-929-2837 for latest design and specifications. Purchaser's approval of this data set signifies that the equipment is acceptable under the provisions of the job specification. Statements and other information contained herein are not express warranties and do not form the basis of any bargain between the parties, but are merely WaterFurnace's opinion or commendation of its products. The latest version of this document is available at www.waterfurnace.com.

Blower Performance Data

Single Speed Unit with Variable Speed ECM Motor

Model	Max ESP	Airflow Speed Settings											
		1	2	3	4	5	6	7	8	9	10	11	12
018	0.50	300	400 G	**500**	**600 L**	**700 H**	**800**	875	950	1025	1125 Aux		
022	0.50		400	500 G	**600 L**	**700**	**800 H**	**900**	1000	1100	1200 Aux		
030	0.50		400	500 G	600	**700 L**	**800**	**900 H**	**1000**	**1100**	1200 Aux		
036	0.50	650	750	850 G	1000	**1100 L**	**1200**	**1300 H**	**1400**	**1500**	1550 Aux		
036 w/1hp*	0.75	800	1000 G	**1100 L**	**1300 H**	**1500**	**1600**	1800	1950	2100	2200 Aux		
042	0.50	650	800	900 G	1050	**1150 L**	**1250**	**1350**	**1450 H**	**1550**	1600 Aux		
042 w/1hp*	0.75	800	900 G	1000	**1200 L**	**1400 H**	**1600**	**1700**	**1850**	2000	2200 Aux	2300	2400
048	0.50	650	800	900	1050 G	1150	**1250**	**1350 L**	**1450**	**1550 H**	1600 Aux		
048 w/1hp*	0.75	800	900	1000 G	1200	**1400 L**	**1600 H**	**1700**	**1850**	2000	2200 Aux	2300	2400
060	0.75	800	950	1100 G	1300	**1500 L**	**1750**	**1950 H**	**2100**	**2300**	2325 Aux		
070	0.75	800	950	1100 G	1300	**1500**	**1750 L**	**1950**	**2100 H**	**2300**	2325 Aux		

Factory settings are at recommended G-L-H-Aux speed settings 6/8/12

L-H settings MUST be located within boldface cfm range

"Aux" is factory setting for auxiliary heat and must be equal to or above the "H" setting as well as at least the minimum required for the auxiliary heat package

"G" may be located anywhere within the airflow table

Cfm is controlled within ±5% up to the maximum ESP

Max ESP includes allowance for wet coil and standard filter

Dual Capacity Unit with Variable Speed ECM Motor

Model	Max ESP	Airflow Switch Settings											
		1	2	3	4	5	6	7	8	9	10	11	12
026	0.50		400	500 G	600	**700 L**	**800**	**900 H**	**1000**	1100	1200 Aux		
038	0.50	650	750 G	850	1000	**1100 L**	**1200**	**1300 H**	**1400**	**1500**	1550 Aux		
038 w/1hp*	0.75	800 G	1000	**1100 L**	**1300 H**	**1500**	**1600**	1800	1875	1925	2000 Aux		
049	0.50	650	800 G	900	1050	1150	**1250**	**1350 L**	**1450**	**1550 H**	1575 Aux		
049 w/1hp*	0.75	800 G	900	1000	1200	**1400 L**	**1600 H**	**1700**	**1850**	2000	2200 Aux	2300	2400
064	0.75	800	950 G	1100	1300	**1500 L**	**1750**	**1950 H**	**2100**	**2300**	2325 Aux		
072	0.75	800	950	1100 G	1300	**1500**	**1750 L**	**1950**	**2100 H**	**2300**	2325 Aux		

Factory settings are at recommended G-L-H-Aux speed settings 6/8/12

L-H settings MUST be located within boldface cfm range

"Aux" is factory setting for auxiliary heat and must be equal to or above the "H" setting as well as at least the minimum required for the auxiliary heat package

"G" may be located anywhere within the airflow table

Cfm is controlled within ±5% up to the maximum ESP

Max ESP includes allowance for wet coil and standard filter

WaterFurnace works continually to improve its products. As a result, the design and specifications of each product at the time of order may be changed without notice. Please contact WaterFurnace at 1-888-929-2837 for latest design and specifications. Purchaser's approval of this data set signifies that the equipment is acceptable under the provisions of the job specification. Statements and other information contained herein are not express warranties and do not form the basis of any bargain between the parties, but are merely WaterFurnace's opinion or commendation of its products. The latest version of this document is available at www.waterfurnace.com.

Blower Performance Data cont.

Single Speed Unit with 5-Speed ECM Motor

Model	Motor Speed	Motor Tap	T'stat Cnct.	Blower Size	Motor HP	Airflow (cfm) at External Static Pressure (in. wg)															
						0	0.05	0.10	0.15	0.20	0.25	0.30	0.35	0.40	0.45	0.50	0.60	0.70	0.80	0.90	1.00
	High	**5**	W			980	960	940	930	920	905	890	875	860	840	820	800	745	-	-	-
	Med High	**4**	Y1			890	878	865	845	825	813	800	785	770	753	735	710	665	-	-	-
022	Med	3		9 x 7	1/2	830	815	800	788	775	755	735	723	710	690	670	640	600	-	-	-
	Med Low	**2**	G			780	760	740	703	665	653	640	620	600	585	570	-	-	-	-	-
	Low	1				625	593	560	535	510	495	480	455	430	410	390	-	-	-	-	-
	High	5				1407	1381	1354	1327	1300	1267	1233	1201	1168	1131	1094	1009	-	-	-	-
	Med High	**4**	W			1146	1134	1122	1111	1099	1085	1071	1062	1052	1042	1031	966	-	-	-	-
030	**Med**	**3**	Y1	9 x 7	1/2	1023	1012	1001	985	969	959	949	937	925	913	901	-	-	-	-	-
	Med Low	2				978	962	946	934	922	907	891	882	872	858	843	-	-	-	-	-
	Low	**1**	G			795	777	759	748	737	718	698	686	673	650	626	-	-	-	-	-
	High	**5**	W			1530	1503	1476	1453	1429	1413	1397	1376	1355	1342	1329	1276	1231	1173	-	-
	Med High	**4**	Y1			1413	1388	1363	1342	1321	1303	1285	1263	1240	1226	1212	1173	1016	946	-	-
036	Med	3		11 x 10	1/2	1355	1325	1294	1276	1258	1235	1212	1188	1164	1144	1123	982	909	883	-	-
	Med Low	2				1336	1299	1261	1242	1222	1202	1181	1157	1132	1111	1090	937	874	830	-	-
	Low	**1**	G			1243	1182	1121	1061	1000	964	928	856	784	744	703	647	592		-	-
	High	5				1934	1910	1886	1871	1855	1827	1799	1780	1760	1747	1734	1700	1659	1617	-	-
	Med High	**4**	W			1799	1783	1767	1744	1720	1693	1666	1649	1631	1617	1603	1560	1530	1492	-	-
042	Med	3		11 x 10	1	1694	1680	1666	1642	1617	1592	1567	1552	1537	1519	1500	1453	1421	1372	-	-
	Med Low	**2**	Y1			1575	1560	1540	1520	1502	1487	1471	1448	1424	1409	1393	1351	1308	1266	-	-
	Low	1	G			1454	1406	1358	1333	1308	1285	1261	1239	1217	1198	1179	1072	1002	988	-	-
	High	5				1934	1910	1886	1871	1855	1827	1799	1780	1760	1747	1734	1700	1659	1617	-	-
	Med High	**4**	W			1799	1783	1767	1744	1720	1693	1666	1649	1631	1617	1603	1560	1530	1492	-	-
048	**Med**	**3**	Y1	11 x 10	1	1694	1680	1666	1642	1617	1592	1567	1552	1537	1519	1500	1453	1421	1372	-	-
	Med Low	2				1575	1560	1540	1520	1502	1487	1471	1448	1424	1409	1393	1351	1308	1266	-	-
	Low	**1**	G			1454	1406	1358	1333	1308	1285	1261	1239	1217	1198	1179	1072	1002	988	-	-
	High	**5**	W			2245	2230	2214	2194	2173	2155	2136	2120	2103	2087	2070	2032	1998	1957	1910	1825
	Med High	4				2092	2073	2054	2035	2015	1995	1975	1958	1940	1922	1904	1880	1843	1806	1767	1728
060	Med	3		11 x 10	1	1951	1931	1910	1889	1868	1850	1831	1812	1793	1774	1755	1722	1688	1654	1612	1562
	Med Low	**2**	Y1			1812	1796	1780	1761	1741	1718	1695	1682	1668	1651	1633	1591	1555	1518	1480	1433
	Low	**1**	G			1682	1661	1640	1616	1591	1573	1555	1533	1510	1495	1480	1441	1400	1351	1316	1263
	High	**5**	W			2472	2454	2435	2414	2393	2371	2349	2328	2306	2289	2271	2230	2189	2121	2033	1936
	Med High	**4**	Y1			2271	2248	2225	2205	2184	2166	2147	2129	2110	2094	2078	2039	2011	1977	1930	1846
070	Med	3		11 x 10	1	2133	2115	2096	2072	2047	2030	2013	1996	1979	1965	1950	1909	1873	1837	1793	1748
	Med Low	2				2008	1985	1962	1939	1915	1898	1880	1862	1843	1828	1812	1774	1742	1703	1669	1635
	Low	**1**	G			1806	1784	1761	1742	1722	1696	1669	1656	1642	1625	1607	1564	1527	1490	1443	1404

Factory speed settings are in Bold 6/14/12

Air flow values are with dry coil and standard filter

For wet coil performance first calculate the face velocity of the air coil (Face Velocity [fpm] = Airflow [cfm] / Face Area [sq ft]). Then for velocities of 200 fpm reduce the static capability by 0.03 in. wg, 300 fpm by 0.08 in. wg, 400 fpm by 0.12in. wg., and 500 fpm by 0.16 in. wg.

Highest setting is for auxiliary heat (W) and lowest setting is for constant blower (G). The "Y1" and "Y2" settings must be between the "G" and "W" settings.

The gray wire is not factory wired to the motor and is tied to the wire harness. This wire can be field connected and can be used with 3ht/2cl thermostats or IntelliZone2 to deliver the required air flow for the Y2 signal.

WaterFurnace works continually to improve its products. As a result, the design and specifications of each product at the time of order may be changed without notice. Please contact WaterFurnace at 1-888-929-2837 for latest design and specifications. Purchaser's approval of this data set signifies that the equipment is acceptable under the provisions of the job specification. Statements and other information contained herein are not express warranties and do not form the basis of any bargain between the parties, but are merely WaterFurnace's opinion or commendation of its products. The latest version of this document is available at www.waterfurnace.com.

Blower Performance Data cont.

Dual Capacity Unit with 5-Speed ECM

Model	Motor Speed	Motor Tap	T'stat Cnct.	Blower Size	Motor HP	Airflow (cfm) at External Static Pressure (in. wg)															
						0	**0.05**	**0.10**	**0.15**	**0.20**	**0.25**	**0.30**	**0.35**	**0.40**	**0.45**	**0.50**	**0.60**	**0.70**	**0.80**	**0.90**	**1.00**
	High	**5**	W			1120	1109	1097	1082	1066	1055	1044	1028	1011	1001	991	932	839	-	-	-
	Med High	**4**	Y2			1020	1006	991	980	968	950	932	922	911	894	876	849	812	-	-	-
026	Med	3		9 x 7	1/2	917	906	895	884	872	854	836	824	812	792	772	754	719	-	-	-
	Med Low	**2**	Y1			836	824	812	794	776	765	754	735	715	703	691	653	631	-	-	-
	Low	**1**	G			735	721	707	687	666	653	640	622	603	589	574	533	-	-	-	-
	High	**5**	W			1530	1503	1476	1453	1429	1413	1397	1376	1355	1342	1329	1276	1231	1173	-	-
	Med High	**4**	Y2			1413	1388	1363	1342	1321	1303	1285	1263	1240	1226	1212	1173	1016	946	-	-
038	**Med**	**3**	Y1	11 x 10	1/2	1355	1325	1294	1276	1258	1235	1212	1188	1164	1144	1123	982	909	883	-	-
	Med Low	2				1336	1299	1261	1242	1222	1202	1181	1157	1132	1111	1090	937	874	830	-	-
	Low	**1**	G			1243	1182	1121	1061	1000	964	928	856	784	744	703	647	592		-	-
	High	**5**	W			1934	1910	1886	1871	1855	1827	1799	1780	1760	1747	1734	1700	1659	1617	-	-
	Med High	4				1799	1783	1767	1744	1720	1693	1666	1649	1631	1617	1603	1560	1530	1492	-	-
049	**Med**	**3**	Y2	11 x 10	1	1694	1680	1666	1642	1617	1592	1567	1552	1537	1519	1500	1453	1421	1372	-	-
	Med Low	**2**	Y1			1575	1560	1540	1520	1502	1487	1471	1448	1424	1409	1393	1351	1308	1266	-	-
	Low	**1**	G			1454	1406	1358	1333	1308	1285	1261	1239	1217	1198	1179	1072	1002	988	-	-
	High	**5**	W			2245	2230	2214	2194	2173	2155	2136	2120	2103	2087	2070	2032	1998	1957	1910	1825
	Med High	**4**	Y2			2092	2073	2054	2035	2015	1995	1975	1958	1940	1922	1904	1880	1843	1806	1767	1728
064	Med	3		11 x 10	1	1951	1931	1910	1889	1868	1850	1831	1812	1793	1774	1755	1722	1688	1654	1612	1562
	Med Low	**2**	Y1			1812	1796	1780	1761	1741	1718	1695	1682	1668	1651	1633	1591	1555	1518	1480	1433
	Low	**1**	G			1682	1661	1640	1616	1591	1573	1555	1533	1510	1495	1480	1441	1400	1351	1316	1263
	High	**5**	W			2472	2454	2435	2414	2393	2371	2349	2328	2306	2289	2271	2230	2189	2121	2033	1936
	Med High	**4**	Y2			2271	2248	2225	2205	2184	2166	2147	2129	2110	2094	2078	2039	2011	1977	1930	1846
072	Med	3		11 x 10	1	2133	2115	2096	2072	2047	2030	2013	1996	1979	1965	1950	1909	1873	1837	1793	1748
	Med Low	**2**	Y1			2008	1985	1962	1939	1915	1898	1880	1862	1843	1828	1812	1774	1742	1703	1669	1635
	Low	**1**	G			1806	1784	1761	1742	1722	1696	1669	1656	1642	1625	1607	1564	1527	1490	1443	1404

Factory speed settings are in Bold 6/14/12

Air flow values are with dry coil and standard filter

For wet coil performance first calculate the face velocity of the air coil (Face Velocity [fpm] = Airflow [cfm] / Face Area [sq ft]). Then for velocities of 200 fpm reduce the static capability by 0.03 in. wg, 300 fpm by 0.08 in. wg, 400 fpm by 0.12in. wg., and 500 fpm by 0.16 in. wg.

Highest setting is for auxiliary heat (W) and lowest setting is for constant blower (G). The "Y1" and "Y2" settings must be between the "G" and "W" settings.

WaterFurnace works continually to improve its products. As a result, the design and specifications of each product at the time of order may be changed without notice. Please contact WaterFurnace at 1-888-929-2837 for latest design and specifications. Purchaser's approval of this data set signifies that the equipment is acceptable under the provisions of the job specification. Statements and other information contained herein are not express warranties and do not form the basis of any bargain between the parties, but are merely WaterFurnace's opinion or commendation of its products. The latest version of this document is available at www.waterfurnace.com.

Blower Performance Data cont.

Unit with Standard PSC Motor

Model	Motor Spd	Blower Size	Motor HP	Airflow (cfm) at External Static Pressure (in. wg)															
				0	0.05	0.10	0.15	0.20	0.25	0.30	0.35	0.40	0.45	0.50	0.60	0.70	0.80	0.90	1.00
012	**H**	6 x 8	1/10	480	450	440	420	410	380	360	340	330	310	300	-	-	-	-	-
	MH*			440	410	400	380	370	350	330	310	300	280	270	-	-	-	-	-
	ML			395	370	360	340	330	310	290	280	270	250	240	-	-	-	-	-
	L			325	310	300	280	270	250	240	230	220	210	200	-	-	-	-	-
018	H	9 x 7	1/6	845	835	825	815	800	790	775	755	735	710	680	565	-	-	-	-
	M			735	730	725	715	705	700	690	675	660	630	600	485	-	-	-	-
	L			620	615	610	605	600	590	580	565	550	520	490	-	-	-	-	-
022	H	9 x 7	1/5	1110	1095	1080	1065	1045	1020	995	970	945	915	880	810	-	-	-	-
	M			850	845	835	825	815	805	795	775	755	735	715	-	-	-	-	-
	L			750	745	740	735	725	715	700	685	670	650	630	-	-	-	-	-
030	H	9 x 7	1/3	1290	1270	1245	1220	1190	1160	1125	1090	1055	1020	985	880	760	-	-	-
	M			1100	1090	1075	1060	1045	1020	995	970	940	910	875	785	625	-	-	-
	L			910	905	900	895	885	875	865	850	835	810	780	710	560	-	-	-
036	H	10 x 10	1/2	1665	1640	1610	1580	1550	1515	1480	1450	1415	1315	1215	1090	980	-	-	-
	M			1465	1445	1425	1400	1375	1350	1325	1260	1190	1140	1090	990	890	-	-	-
	L			1130	1115	1100	1090	1075	1035	995	965	930	895	860	795	730	-	-	-
042	H	10 x 10	1/2	2010	1975	1940	1905	1870	1825	1780	1735	1690	1640	1590	1470	1210	-	-	-
	M			1670	1650	1630	1610	1590	1560	1530	1495	1460	1425	1390	1190	1080	-	-	-
	L			1220	1215	1210	1295	1200	1180	1160	1130	1100	1060	1020	930	-	-	-	-
048	H	10 x 10	1/2	2010	1975	1940	1905	1870	1825	1780	1735	1690	1640	1590	1470	1210	-	-	-
	M			1670	1650	1630	1610	1590	1560	1530	1495	1460	1425	1390	1190	1080	-	-	-
	L			1220	1215	1210	1295	1200	1180	1160	1130	1100	1060	1020	930	-	-	-	-
060	H	11 x 10	1	2430	2400	2365	2330	2290	2255	2215	2180	2140	2095	2045	1945	1835	1715	1510	1330
	M			2265	2235	2205	2175	2145	2110	2070	2035	2000	1960	1915	1825	1730	1605	1440	1260
	L			2075	2050	2020	1995	1965	1940	1915	1885	1850	1820	1785	1720	1610	1505	1335	1175
070	**H**	11 x 10	1	2430	2400	2365	2330	2290	2255	2215	2180	2140	2095	2045	1945	1835	1715	1510	1330
	M			2265	2235	2205	2175	2145	2110	2070	2035	2000	1960	1915	1825	1730	1605	1440	1260
	L			2075	2050	2020	1995	1965	1940	1915	1885	1850	1820	1785	1720	1610	1505	1335	1175

2/7/12

Unit with Optional High Static PSC Motor

Model	Motor Spd	Blower Size	Motor HP	Airflow (cfm) at External Static Pressure (in. wg)															
				0	0.05	0.10	0.15	0.20	0.25	0.30	0.35	0.40	0.45	0.50	0.60	0.70	0.80	0.90	1.00
022	H	9 x 7	1/3	1290	1270	1245	1220	1190	1160	1125	1090	1055	1020	985	880	760	-	-	-
	M			1100	1090	1075	1060	1045	1020	995	970	940	910	875	785	625	-	-	-
	L			910	905	900	895	885	875	865	850	835	810	780	710	560	-	-	-
030	H	9 x 7	1/2	1365	1340	1325	1305	1280	1250	1215	1180	1140	1100	1055	960	850	-	-	-
	M			1040	1040	1035	1030	1020	1005	990	970	945	915	885	810	735	-	-	-
	L			880	880	880	880	875	870	860	840	820	800	775	730	480	-	-	-
036	H	10 x 10	1/2	1930	1905	1875	1840	1805	1765	1725	1680	1635	1530	1425	1270	1150	1025	-	-
	M			1635	1620	1600	1580	1555	1530	1505	1465	1425	1335	1240	1135	1035	775	-	-
	L			1230	1230	1225	1215	1200	1165	1130	1095	1060	1035	1005	935	795	675	-	-
042	H	10 x 10	3/4	2115	2075	2035	1980	1920	1900	1880	1840	1795	1730	1660	1390	1225	1070	-	-
	M			2005	1980	1950	1910	1865	1815	1765	1725	1685	1585	1485	1315	1140	1025	-	-
	L			1860	1835	1805	1780	1750	1715	1675	1635	1590	1540	1490	1260	1115	980	-	-
048	H	10 x 10	3/4	2115	2075	2035	1980	1920	1900	1880	1840	1795	1730	1660	1390	1225	1070	-	-
	M			2005	1980	1950	1910	1865	1815	1765	1725	1685	1585	1485	1315	1140	1025	-	-
	L			1860	1835	1805	1780	1750	1715	1675	1635	1590	1540	1490	1260	1115	980	-	-

Factory settings are in Bold 1/25/12

High-Static option not available for 012, 018, 060, and 070

Air flow values are with dry coil and standard filter

For wet coil performance first calculate the face velocity of the air coil (Face Velocity [fpm] = Airflow [cfm] / Face Area [sq ft]). Then for velocities of 200 fpm reduce the static capability by 0.03 in. wg, 300 fpm by 0.08 in. wg, 400 fpm by 0.12in. wg. and 500 fpm by 0.16 in. wg.

WaterFurnace works continually to improve its products. As a result, the design and specifications of each product at the time of order may be changed without notice. Please contact WaterFurnace at 1-888-929-2837 for latest design and specifications. Purchaser's approval of this data set signifies that the equipment is acceptable under the provisions of the job specification. Statements and other information contained herein are not express warranties and do not form the basis of any bargain between the parties, but are merely WaterFurnace's opinion or commendation of its products. The latest version of this document is available at www.waterfurnace.com.

Operating Limits

Operating Limits	Cooling		Heating	
	(°F)	(°C)	(°F)	(°C)
Air Limits				
Min. Ambient Air	45	7.2	45	7.2
Rated Ambient Air	80	26.7	70	21.1
Max. Ambient Air	100	37.8	85	29.4
Min. Entering Air	50	10.0	40	4.4
Rated Entering Air db/wb	80.6/66.2	27/19	68	20.0
Max. Entering Air db/wb	110/83	43/28.3	80	26.7
Water Limits				
Min. Entering Water	30	-1.1	20	-6.7
Normal Entering Water	50-110	10-43.3	30-70	-1.1
Max. Entering Water	120	48.9	90	32.2

NOTE: Minimum/maximum limits are only for start-up conditions, and are meant for bringing the space up to occupancy temperature. Units are not designed to operate at the minimum/maximum conditions on a regular basis. The operating limits are dependent upon three primary factors: 1) water temperature, 2) return air temperature, and 3) ambient temperature. When any of the factors are at the minimum or maximum levels, the other two factors must be at the normal level for proper and reliable unit operation.

Definitions

Abbreviations and Definitions

cfm = airflow, cubic feet/minute
EWT = entering water temperature, Fahrenheit
gpm = water flow in gallons/minute
WPD = water pressure drop, psi and feet of water
EAT = entering air temperature, Fahrenheit (dry bulb/wet bulb)
HC = air heating capacity, MBtu/h
TC = total cooling capacity, MBtu/h
SC = sensible cooling capacity, MBtu/h
kW = total power unit input, kilowatts
HR = total heat of rejection, MBtu/h
HE = total heat of extraction, MBtu/h
HWC = hot water generator capacity, MBtu/h
EER = Energy Efficient Ratio
= Btu output/Watt input
COP = Coefficient of Performance
= Btu output/Btu input
LWT = leaving water temperature, °F
LAT = leaving air temperature, °F
TH = total heating capacity, MBtu/h
LC = latent cooling capacity, MBtu/h
S/T = sensible to total cooling ratio

Reference Calculations

Heating Calculations:	Cooling Calculations:
$LWT = EWT - \frac{HE}{gpm \times 500}$	$LWT = EWT + \frac{HR}{gpm \times 500}$
$LAT = EAT + \frac{HC}{cfm \times 1.08}$	$LAT\ (DB) = EAT\ (DB) - \frac{SC}{cfm \times 1.08}$
	$LC = TC - SC$
$TH = HC + HW$	$S/T = \frac{SC}{TC}$

Notes to Performance Data Tables

The following notes apply to all performance data tables:

- Performance ratings are based on 80°F DB/67°F WB EAT for cooling and 70°F DB EAT for heating.
- Three flow rates are shown for each unit. The lowest flow rate shown is used for geothermal open loop/well water systems with a minimum of 50°F EWT. The middle flow rate shown is the minimum geothermal closed loop flow rate. The highest flow rate shown is optimum for geothermal closed loop systems and the suggested flow rate for boiler/tower applications.
- The hot water generator numbers are based on a flow rate of 0.4 gpm/ton of rated capacity with an EWT of 90°F.
- Entering water temperatures below 40°F assumes 15% antifreeze solution.
- For non-standard EAT conditions, apply the appropriate Correction Factor tables.
- Interpolation between EWT, gpm, and cfm data is permissible, extrapolation is not.

WaterFurnace works continually to improve its products. As a result, the design and specifications of each product at the time of order may be changed without notice. Please contact WaterFurnace at 1-888-929-2837 for latest design and specifications. Purchaser's approval of this data set signifies that the equipment is acceptable under the provisions of the job specification. Statements and other information contained herein are not express warranties and do not form the basis of any bargain between the parties, but are merely WaterFurnace's opinion or commendation of its products. The latest version of this document is available at www.waterfurnace.com.

Correction Factor Tables

Air Flow Corrections (Dual Capacity Part Load)

Airflow		Cooling				Heating		
cfm Per Ton of Clg	% of Nominal	Total Cap	Sens Cap	Power	Heat of Rej	Htg Cap	Power	Heat of Ext
240	60	0.922	0.778	0.956	0.924	0.943	1.239	0.879
275	69	0.944	0.830	0.962	0.944	0.958	1.161	0.914
300	75	0.957	0.866	0.968	0.958	0.968	1.115	0.937
325	81	0.970	0.900	0.974	0.970	0.977	1.075	0.956
350	88	0.982	0.933	0.981	0.980	0.985	1.042	0.972
375	94	0.991	0.968	0.991	0.991	0.993	1.018	0.988
400	**100**	**1.000**	**1.000**	**1.000**	**1.000**	**1.000**	**1.000**	**1.000**
425	106	1.007	1.033	1.011	1.008	1.007	0.990	1.010
450	113	1.013	1.065	1.023	1.015	1.012	0.987	1.018
475	119	1.017	1.099	1.037	1.022	1.018	0.984	1.025
500	125	1.020	1.132	1.052	1.027	1.022	0.982	1.031
520	130	1.022	1.159	1.064	1.030	1.025	0.979	1.034

5/30/06

Air Flow Corrections (Dual Capacity Full Load and Single Speed)

Airflow		Cooling				Heating		
cfm Per Ton of Clg	% of Nominal	Total Cap	Sens Cap	Power	Heat of Rej	Htg Cap	Power	Heat of Ext
240	60	0.922	0.786	0.910	0.920	0.943	1.150	0.893
275	69	0.944	0.827	0.924	0.940	0.958	1.105	0.922
300	75	0.959	0.860	0.937	0.955	0.968	1.078	0.942
325	81	0.971	0.894	0.950	0.967	0.977	1.053	0.959
350	88	0.982	0.929	0.964	0.978	0.985	1.031	0.973
375	94	0.992	0.965	0.982	0.990	0.993	1.014	0.988
400	**100**	**1.000**	**1.000**	**1.000**	**1.000**	**1.000**	**1.000**	**1.000**
425	106	1.007	1.034	1.020	1.010	1.007	0.990	1.011
450	113	1.012	1.065	1.042	1.018	1.013	0.983	1.020
475	119	1.017	1.093	1.066	1.026	1.018	0.980	1.028
500	125	1.019	1.117	1.092	1.033	1.023	0.978	1.034
520	130	1.020	1.132	1.113	1.038	1.026	0.975	1.038

5/30/06

Cooling Capacity Corrections

Entering Air WB °F	Total Clg Cap	Sensible Cooling Capacity Multipliers - Entering DB °F										Power Input	Heat of Rejection
		60	65	70	75	80	80.6	85	90	95	100		
55	0.898	0.723	0.866	1.048	1.185	*	*	*	*	*	*	0.985	0.913
60	0.912		0.632	0.880	1.078	1.244	1.260	*	*	*	*	0.994	0.927
63	0.945			0.768	0.960	1.150	1.175	*	*	*	*	0.996	0.954
65	0.976			0.694	0.881	1.079	1.085	1.270	*	*	*	0.997	0.972
66.2	0.983			0.655	0.842	1.040	1.060	1.232	*	*	*	0.999	0.986
67	**1.000**			0.616	0.806	**1.000**	1.023	1.193	1.330	1.480	*	**1.000**	**1.000**
70	1.053				0.693	0.879	0.900	1.075	1.205	1.404	*	1.003	1.044
75	1.168					0.687	0.715	0.875	1.040	1.261	1.476	1.007	1.141

NOTE: * Sensible capacity equals total capacity at conditions shown.

3/28/12

Heating Capacity Corrections

Ent Air DB °F	Heating Corrections		
	Htg Cap	Power	Heat of Ext
45	1.062	0.739	1.158
50	1.050	0.790	1.130
55	1.037	0.842	1.096
60	1.025	0.893	1.064
65	1.012	0.945	1.030
68	1.005	0.976	1.012
70	**1.000**	**1.000**	**1.000**
75	0.987	1.048	0.970
80	0.975	1.099	0.930

11/10/09

WaterFurnace works continually to improve its products. As a result, the design and specifications of each product at the time of order may be changed without notice. Please contact WaterFurnace at 1-888-929-2837 for latest design and specifications. Purchaser's approval of this data set signifies that the equipment is acceptable under the provisions of the job specification. Statements and other information contained herein are not express warranties and do not form the basis of any bargain between the parties, but are merely WaterFurnace's opinion or commendation of its products. The latest version of this document is available at www.waterfurnace.com.

Antifreeze Corrections

Catalog performance can be corrected for antifreeze use. Please use the following table and note the example given.

Antifreeze Type	Antifreeze % by wt	Heating	Cooling	Pressure Drop
EWT - °F [°C]		**30 [-1.1]**	**90 [32.2]**	**30 [-1.1]**
Water	0	1.000	1.000	1.000
Ethylene Glycol	10	0.973	0.991	1.075
	20	0.943	0.979	1.163
	30	0.917	0.965	1.225
	40	0.890	0.955	1.324
	50	0.865	0.943	1.419
Propylene Glycol	10	0.958	0.981	1.130
	20	0.913	0.969	1.270
	30	0.854	0.950	1.433
	40	0.813	0.937	1.614
	50	0.770	0.922	1.816
Ethanol	10	0.927	0.991	1.242
	20	0.887	0.972	1.343
	30	0.856	0.947	1.383
	40	0.815	0.930	1.523
	50	0.779	0.911	1.639
Methanol	10	0.957	0.986	1.127
	20	0.924	0.970	1.197
	30	0.895	0.951	1.235
	40	0.863	0.936	1.323
	50	0.833	0.920	1.399

WARNING: Gray area represents antifreeze concentrations greater than 35% by weight and should be avoided due to the extreme performance penalty they represent.

Antifreeze Correction Example

Antifreeze solution is Propylene Glycol 20% by weight. Determine the corrected heating and cooling performance at 30°F and 90°F respectively as well as pressure drop at 30°F for a 5 Series NS*022-ECM.

The corrected cooling capacity at 90°F would be: 22,400 MBtu/h x 0.969 = 21,706 MBtu/h

The corrected heating capacity at 30°F would be: 14,500 MBtu/h x 0.913 = 13,239 MBtu/h

The corrected pressure drop at 30°F and 6 gpm would be: 6.6 feet of head x 1.270 = 8.38 feet of head

WaterFurnace works continually to improve its products. As a result, the design and specifications of each product at the time of order may be changed without notice. Please contact WaterFurnace at 1-888-929-2837 for latest design and specifications. Purchaser's approval of this data set signifies that the equipment is acceptable under the provisions of the job specification. Statements and other information contained herein are not express warranties and do not form the basis of any bargain between the parties, but are merely WaterFurnace's opinion or commendation of its products. The latest version of this document is available at www.waterfurnace.com.

Pressure Drop

Single Speed

Model	gpm	Pressure Drop (psi)				
		30°F	50°F	70°F	90°F	110°F
012	1.5	0.3	0.3	0.3	0.3	0.3
	2.5	1.0	1.0	1.0	1.0	1.0
	3.5	1.7	1.7	1.7	1.6	1.6
	4.5	2.5	2.4	2.4	2.4	2.3
018	3.0	1.6	1.6	1.5	1.5	1.4
	4.0	2.9	2.9	2.8	2.8	2.7
	5.0	4.2	4.2	4.1	4.0	3.9
	6.0	6.0	5.8	5.7	5.6	5.5
022	3	0.9	0.9	0.8	0.7	0.7
	4.5	1.7	1.6	1.5	1.4	1.3
	6	2.8	2.7	2.5	2.3	2.2
	8	4.7	4.4	4.1	3.9	3.6
030	4	1.3	1.2	1.2	1.1	1.0
	6	2.7	2.5	2.4	2.2	2.2
	8	4.5	4.2	3.9	3.7	3.4
	10	6.8	6.3	5.4	5.4	5.0
036	5	1.0	1.0	0.9	0.8	0.8
	7	2.1	1.9	1.8	1.7	1.6
	9	3.6	3.3	3.0	2.8	2.6
	12	6.3	5.9	5.5	5.1	4.8
042	5	0.8	0.7	0.7	0.7	0.6
	8	2.1	2.1	1.9	1.8	1.7
	11	4.2	4.1	3.8	3.5	3.3
	14	7.6	6.7	6.3	5.8	5.4
048	6	1.1	1.0	1.0	0.9	0.8
	9	2.3	2.1	2.0	1.9	1.7
	12	3.9	3.7	3.4	3.2	3.0
	16	6.7	6.3	5.9	5.5	5.1
060	9	2.4	2.2	2.1	2.0	1.8
	12	3.9	3.6	3.4	3.2	2.9
	15	5.7	5.3	5.0	4.7	4.3
	20	9.5	8.9	8.3	7.8	7.2
070	12	3.0	2.8	2.6	2.4	2.2
	15	4.4	4.0	3.8	3.5	3.3
	18	6.0	5.5	5.1	4.8	4.4
	24	9.7	9.1	8.5	7.9	7.3

2/7/12

Dual Capacity

Model	gpm	Pressure Drop (psi)				
		30°F	50°F	70°F	90°F	110°F
026 full load	4	1.4	1.3	1.2	1.1	1.0
	6	2.8	2.6	2.4	2.3	2.1
	8	4.7	4.4	4.1	3.8	3.5
	10	7.0	6.6	6.2	5.8	5.3
026 part load	3	0.8	0.7	0.7	0.7	0.6
	5	2.0	1.8	1.7	1.6	1.5
	7	3.6	3.4	3.2	3.0	2.8
	9	5.8	5.5	5.1	4.8	4.4
038 full load	5	1.2	1.2	1.1	1.0	1.0
	7	2.2	2.1	1.9	1.8	1.7
	9	3.4	3.2	3.0	2.8	2.6
	11	4.9	4.6	4.3	4	3.7
038 part load	4	0.9	0.8	0.8	0.7	0.7
	6	1.7	1.6	1.5	1.4	1.3
	8	2.8	2.6	2.5	2.3	2.1
	10	4.2	3.9	3.7	3.4	3.2
049 full load	6	1.2	1.2	1.1	1.0	1.0
	9	2.4	2.2	2.1	2.0	1.8
	12	3.9	3.6	3.4	3.2	2.9
	15	5.7	5.3	5	4.7	4.3
049 part load	5	0.9	0.9	0.8	0.8	0.7
	8	2.0	1.8	1.7	1.6	1.5
	11	3.4	3.1	2.9	2.8	2.5
	14	5.0	4.7	4.4	4.1	3.8
064 full load	8	1.8	1.7	1.6	1.4	1.3
	12	3.8	3.5	3.3	3.0	2.8
	16	6.5	6.0	5.6	5.2	4.8
	20	9.7	9.1	8.5	8.0	7.4
064 part load	6	1.0	0.9	0.9	0.8	0.8
	10	2.6	2.5	2.3	2.1	2.0
	14	5.0	4.7	4.4	4.1	3.8
	18	8.1	7.6	7.1	6.6	6.1
072 full load	12	3.2	3.0	2.8	2.6	2.4
	15	4.5	4.2	4.0	3.7	3.4
	18	6.0	5.7	5.3	4.9	4.6
	21	7.8	7.3	6.8	6.4	5.9
072 part load	10	2.3	2.1	2.0	1.9	1.7
	13	3.6	3.3	3.0	2.8	2.6
	16	5.0	4.6	4.3	4.0	3.7
	19	6.5	6.2	5.8	5.4	5.0

1/26/12

WaterFurnace works continually to improve its products. As a result, the design and specifications of each product at the time of order may be changed without notice. Please contact WaterFurnace at 1-888-929-2837 for latest design and specifications. Purchaser's approval of this data set signifies that the equipment is acceptable under the provisions of the job specification. Statements and other information contained herein are not express warranties and do not form the basis of any bargain between the parties, but are merely WaterFurnace's opinion or commendation of its products. The latest version of this document is available at www.waterfurnace.com.

Performance Data

NS012 - Single Speed PSC (400 cfm)

EWT °F	Flow Rate GPM	WPD		Heating - EAT 70 °F					Cooling - EAT 80/67 °F					
		psi	ft/hd	HC MBtu/h	Power kW	HE MBtu/h	LAT °F	COP	TC MBtu/h	SC MBtu/h	S/T Ratio	Power kW	HR MBtu/h	EER
20	1.5	0.3	0.7	Operation not recommended					Operation not recommended					
	2.5	1.0	2.3											
	3.5	1.7	3.9	7.5	0.78	4.8	85.3	2.80						
30	1.5	0.3	0.7	Operation not recommended					Operation not recommended					
	2.5	1.0	2.3	9.0	0.80	6.3	88.8	3.29	16.3	10.3	0.63	0.43	17.8	37.7
	3.5	1.7	3.9	9.1	0.81	6.3	89.1	3.29	16.5	10.3	0.62	0.41	18.0	40.2
40	1.5	0.3	0.7	Operation not recommended					Operation not recommended					
	2.5	1.0	2.3	10.0	0.82	7.2	91.1	3.57	15.8	10.1	0.64	0.49	17.4	31.9
	3.5	1.7	3.9	10.3	0.83	7.4	91.7	3.64	16.0	10.1	0.63	0.46	17.6	34.9
50	1.5	0.3	0.7	10.6	0.83	7.8	92.5	3.75	15.0	10.0	0.66	0.61	17.1	24.6
	2.5	1.0	2.3	11.0	0.83	8.2	93.5	3.86	15.2	9.9	0.65	0.56	17.1	27.3
	3.5	1.7	3.8	11.4	0.84	8.5	94.4	3.97	15.5	9.9	0.64	0.51	17.2	30.6
60	1.5	0.3	0.7	11.8	0.85	8.9	95.2	4.08	14.5	9.7	0.67	0.69	16.9	21.1
	2.5	1.0	2.3	12.2	0.85	9.3	96.3	4.21	14.7	9.7	0.66	0.64	16.9	23.1
	3.5	1.7	3.8	12.7	0.86	9.8	97.4	4.33	14.9	9.7	0.65	0.59	16.9	25.3
70	1.5	0.3	0.7	12.9	0.86	10.0	98.0	4.40	14.1	9.4	0.67	0.77	16.7	18.3
	2.5	1.0	2.3	13.5	0.87	10.5	99.2	4.54	14.2	9.5	0.67	0.72	16.7	19.8
	3.5	1.7	3.8	14.0	0.88	11.0	100.4	4.67	14.4	9.6	0.67	0.67	16.7	21.4
80	1.5	0.3	0.7	14.3	0.88	11.3	101.2	4.76	13.6	9.2	0.68	0.87	16.6	15.7
	2.5	1.0	2.2	14.9	0.89	11.9	102.6	4.92	13.8	9.3	0.68	0.82	16.6	16.8
	3.5	1.6	3.8	15.3	0.90	12.2	103.4	5.00	13.9	9.4	0.68	0.76	16.5	18.2
90	1.5	0.3	0.7	15.8	0.90	12.8	104.7	5.15	13.2	9.0	0.68	0.97	16.5	13.6
	2.5	1.0	2.2	16.5	0.91	13.4	106.3	5.34	13.3	9.2	0.69	0.93	16.5	14.2
	3.5	1.6	3.8	16.6	0.92	13.5	106.4	5.32	13.4	9.2	0.69	0.85	16.3	15.7
100	1.5	0.3	0.7	Operation not recommended					Operation not recommended					
	2.5	1.0	2.2						12.9	9.0	0.70	1.06	16.5	12.1
	3.5	1.6	3.7						13.0	9.1	0.70	0.95	16.2	13.7
110	1.5	0.3	0.7						Operation not recommended					
	2.5	1.0	2.2						12.4	8.8	0.71	1.21	16.5	10.3
	3.5	1.6	3.6						12.6	8.9	0.71	1.05	16.2	12.0
120	1.5	0.3	0.7						Operation not recommended					
	2.5	1.0	2.2						12.0	8.6	0.72	1.37	16.7	8.8
	3.5	1.5	3.5						12.1	8.7	0.72	1.16	16.0	10.5

10/1/10

WaterFurnace works continually to improve its products. As a result, the design and specifications of each product at the time of order may be changed without notice. Please contact WaterFurnace at 1-888-929-2837 for latest design and specifications. Purchaser's approval of this data set signifies that the equipment is acceptable under the provisions of the job specification. Statements and other information contained herein are not express warranties and do not form the basis of any bargain between the parties, but are merely WaterFurnace's opinion or commendation of its products. The latest version of this document is available at www.waterfurnace.com.

Performance Data cont.

NS018 - Single Speed PSC (600 cfm)

EWT °F	Flow Rate GPM	WPD		Heating - EAT 70 °F						Cooling - EAT 80/67 °F						
		psi	ft/hd	HC MBtu/h	Power kW	HE MBtu/h	LAT °F	COP	HWC MBtu/h	TC MBtu/h	SC MBtu/h	S/T Ratio	Power kW	HR MBtu/h	EER	HWC MBtu/h
20	3.0	1.6	3.8	Operation not recommended						Operation not recommended						
	4.0	2.9	6.8													
	5.0	4.3	9.9	12.7	1.18	8.7	87.6	3.16	1.4							
30	3.0	1.6	3.7	Operation not recommended						Operation not recommended						
	4.0	2.9	6.7	14.4	1.25	10.1	90.2	3.36	1.5	19.5	12.9	0.66	0.76	22.1	25.8	--
	5.0	4.2	9.7	14.6	1.26	10.3	90.5	3.40	1.5	18.8	12.4	0.66	0.74	21.4	25.4	--
40	3.0	1.6	3.6	Operation not recommended						Operation not recommended						
	4.0	2.9	6.6	15.9	1.31	11.4	92.5	3.55	1.6	19.9	13.0	0.65	0.81	22.7	24.7	--
	5.0	4.2	9.6	16.3	1.32	11.8	93.1	3.61	1.6	19.8	12.7	0.64	0.75	22.3	26.2	--
50	3.0	1.6	3.6	17.1	1.36	12.4	94.3	3.69	1.7	20.1	13.2	0.65	0.95	23.3	21.3	0.9
	4.0	2.9	6.6	17.5	1.37	12.8	95.0	3.75	1.7	20.4	13.1	0.64	0.86	23.3	23.8	0.9
	5.0	4.2	9.6	17.9	1.38	13.2	95.7	3.81	1.8	20.7	13.1	0.63	0.77	23.3	27.0	0.9
60	3.0	1.5	3.5	19.0	1.42	14.2	97.4	3.94	1.9	19.2	12.6	0.66	1.00	22.6	19.2	1.1
	4.0	2.8	6.5	19.4	1.43	14.5	98.0	3.98	1.9	19.4	12.6	0.65	0.94	22.6	20.6	1.1
	5.0	4.1	9.5	19.8	1.45	14.9	98.6	4.02	2.0	19.6	12.6	0.64	0.88	22.6	22.3	1.0
70	3.0	1.5	3.5	21.0	1.48	16.0	100.4	4.17	2.1	18.3	12.1	0.66	1.05	21.9	17.4	1.3
	4.0	2.8	6.5	21.4	1.50	16.3	101.0	4.18	2.1	18.4	12.1	0.66	1.02	21.9	18.0	1.3
	5.0	4.1	9.5	21.7	1.52	16.6	101.6	4.20	2.2	18.5	12.1	0.66	0.99	21.9	18.6	1.2
80	3.0	1.5	3.4	23.3	1.54	18.1	104.0	4.44	2.4	17.5	11.6	0.66	1.11	21.3	15.8	1.7
	4.0	2.8	6.4	23.7	1.57	18.3	104.5	4.43	2.4	17.5	11.6	0.67	1.12	21.3	15.6	1.6
	5.0	4.1	9.4	24.0	1.58	18.6	105.1	4.45	2.5	17.7	11.8	0.67	1.12	21.5	15.8	1.5
90	3.0	1.5	3.4	25.9	1.61	20.4	108.0	4.72	2.8	16.7	11.1	0.66	1.17	20.7	14.3	2.2
	4.0	2.8	6.4	26.1	1.64	20.5	108.3	4.68	2.8	16.6	11.2	0.67	1.22	20.8	13.6	2.0
	5.0	4.0	9.2	26.3	1.65	20.7	108.6	4.67	2.8	16.8	11.4	0.68	1.24	21.1	13.6	1.9
100	3.0	1.4	3.3	Operation not recommended						Operation not recommended						
	4.0	2.7	6.3							15.8	10.7	0.68	1.34	20.4	11.8	2.5
	5.0	4.0	9.1							15.8	11.0	0.70	1.37	20.4	11.5	2.3
110	3.0	1.4	3.2							Operation not recommended						
	4.0	2.7	6.2							15.0	10.3	0.69	1.46	20.0	10.3	3.2
	5.0	3.9	9.0							14.7	10.7	0.73	1.50	19.8	9.8	3.0
120	3.0	1.4	3.2							Operation not recommended						
	4.0	2.7	6.2							14.3	9.9	0.70	1.60	19.7	8.9	4.0
	5.0	3.9	8.9							13.7	10.2	0.75	1.66	19.4	8.3	3.6

10/1/10

WaterFurnace works continually to improve its products. As a result, the design and specifications of each product at the time of order may be changed without notice. Please contact WaterFurnace at 1-888-929-2837 for latest design and specifications. Purchaser's approval of this data set signifies that the equipment is acceptable under the provisions of the job specification. Statements and other information contained herein are not express warranties and do not form the basis of any bargain between the parties, but are merely WaterFurnace's opinion or commendation of its products. The latest version of this document is available at www.waterfurnace.com.

Performance Data cont.

NS022 - Single Speed PSC (700 cfm)

EWT °F	Flow Rate GPM	WPD		HEATING - EAT 70°F						COOLING - EAT 80/67 °F						
		PSI	FT	HC Mbtu/h	Power kW	HE Mbtu/h	LAT °F	COP	HWC Mbtu/h	TC Mbtu/h	SC MBtu/h	S/T Ratio	Power kW	HR Mbtu/h	EER	HWC MBtu/h
20	3.0	0.9	2.2	Operation not recommended						Operation not recommended						
	4.5	1.8	4.2													
	6.0	2.9	6.8	12.6	1.30	8.1	86.6	2.84	1.5							
30	3.0	0.9	2.1	Operation not recommended						Operation not recommended						
	4.5	1.7	4.0	14.8	1.31	10.3	89.5	3.31	1.6	24.1	18.0	0.75	0.81	26.6	29.7	---
	6.0	2.8	6.6	15.0	1.32	10.5	89.8	3.33	1.6	24.4	17.1	0.70	0.79	26.8	30.9	---
40	3.0	0.9	2.0	Operation not recommended						Operation not recommended						
	4.5	1.7	3.9	17.3	1.33	12.8	92.9	3.82	1.8	24.9	17.1	0.68	0.87	27.3	28.6	---
	6.0	2.8	6.4	17.6	1.34	13.0	93.3	3.85	1.8	25.2	17.1	0.68	0.85	27.5	29.8	---
50	3.0	0.9	2.0	18.8	1.33	14.2	94.8	4.14	2.0	25.4	16.8	0.66	0.99	27.7	25.7	1.2
	4.5	1.6	3.8	19.7	1.36	15.0	96.0	4.25	2.0	25.7	16.9	0.66	0.95	28.0	27.1	1.1
	6.0	2.7	6.2	20.0	1.36	15.4	96.5	4.30	2.1	26.0	16.9	0.65	0.93	28.2	28.1	1.1
60	3.0	0.8	1.9	21.2	1.36	16.5	98.0	4.55	2.2	24.6	16.6	0.68	1.09	26.9	22.5	1.4
	4.5	1.6	3.7	22.2	1.39	17.5	99.4	4.67	2.3	24.9	16.8	0.68	1.04	27.2	23.8	1.3
	6.0	2.6	6.0	22.6	1.40	17.8	99.8	4.72	2.3	25.1	16.8	0.67	1.02	27.4	24.7	1.3
70	3.0	0.8	1.8	23.6	1.40	18.8	101.2	4.94	2.5	24.3	16.4	0.68	1.22	26.6	19.9	1.7
	4.5	1.5	3.6	24.8	1.43	19.9	102.8	5.06	2.5	24.6	16.6	0.68	1.16	26.9	21.1	1.7
	6.0	2.5	5.8	25.1	1.44	20.2	103.2	5.11	2.6	24.7	16.6	0.67	1.13	27.0	21.9	1.6
80	3.0	0.8	1.8	25.8	1.45	20.8	104.1	5.22	2.8	23.2	16.1	0.69	1.36	25.6	17.1	2.2
	4.5	1.5	3.4	27.0	1.48	21.9	105.7	5.36	2.8	23.5	16.2	0.69	1.30	25.8	18.1	2.1
	6.0	2.4	5.6	27.4	1.49	22.3	106.3	5.40	2.9	23.7	16.2	0.69	1.26	26.0	18.8	2.0
90	3.0	0.7	1.7	28.0	1.50	22.9	107.0	5.47	3.1	21.5	15.6	0.73	1.52	24.0	14.1	2.7
	4.5	1.4	3.3	29.2	1.52	24.0	108.6	5.62	3.2	21.7	15.8	0.73	1.45	24.2	15.0	2.6
	6.0	2.3	5.4	29.7	1.54	24.5	109.3	5.66	3.3	21.9	15.8	0.72	1.41	24.4	15.5	2.4
100	3.0	0.7	1.7	Operation not recommended						Operation not recommended						
	4.5	1.4	3.2							20.8	15.4	0.74	1.62	23.3	12.8	3.2
	6.0	2.2	5.2							21.0	15.4	0.74	1.58	23.5	13.2	3.0
110	3.0	0.7	1.6							Operation not recommended						
	4.5	1.3	3.1							18.6	14.9	0.80	1.81	21.3	10.2	3.9
	6.0	2.2	5.0							18.7	14.9	0.79	1.77	21.5	10.6	3.7
120	3.0	0.7	1.5							Operation not recommended						
	4.5	1.3	2.9							17.2	14.4	0.84	2.04	20.0	8.4	4.7
	6.0	2.1	4.8							17.4	14.4	0.83	1.99	20.2	8.8	4.4

2/10/12

WaterFurnace works continually to improve its products. As a result, the design and specifications of each product at the time of order may be changed without notice. Please contact WaterFurnace at 1-888-929-2837 for latest design and specifications. Purchaser's approval of this data set signifies that the equipment is acceptable under the provisions of the job specification. Statements and other information contained herein are not express warranties and do not form the basis of any bargain between the parties, but are merely WaterFurnace's opinion or commendation of its products. The latest version of this document is available at www.waterfurnace.com.

Performance Data cont.

NS030 - Single Speed PSC (900 cfm)

EWT °F	Flow Rate GPM	WPD		HEATING - EAT 70°F						COOLING - EAT 80/67 °F						
		PSI	FT	HC Mbtu/h	Power kW	HE Mbtu/h	LAT °F	COP	HWC Mbtu/h	TC Mbtu/h	SC MBtu/h	S/T Ratio	Power kW	HR Mbtu/h	EER	HWC MBtu/h
20	4.0	1.4	3.5	Operation not recommended						Operation not recommended						
	6.0	2.8	7.2													
	8.0	4.6	12.1	17.6	1.67	11.9	88.1	3.09	2.0							
30	4.0	1.4	3.4	Operation not recommended						Operation not recommended						
	6.0	2.7	7.0	20.2	1.66	14.6	90.8	3.57	2.2	26.4	18.9	0.71	1.06	30.0	24.9	---
	8.0	4.4	11.8	20.7	1.68	14.9	91.2	3.61	2.2	26.9	18.8	0.70	1.03	30.4	26.1	---
40	4.0	1.3	3.3	Operation not recommended						Operation not recommended						
	6.0	2.6	6.8	23.7	1.70	17.9	94.4	4.07	2.4	28.7	20.4	0.71	1.14	32.6	25.1	---
	8.0	4.3	11.4	24.2	1.72	18.3	94.9	4.12	2.5	29.1	20.3	0.70	1.11	32.9	26.1	---
50	4.0	1.3	3.2	25.9	1.74	20.0	96.6	4.36	2.6	30.7	21.8	0.71	1.29	35.1	23.8	1.5
	6.0	2.5	6.6	26.8	1.75	20.8	97.6	4.49	2.7	30.8	21.9	0.71	1.25	35.0	24.7	1.4
	8.0	4.2	11.1	27.4	1.76	21.3	98.1	4.55	2.8	31.2	21.9	0.70	1.22	35.3	25.5	1.4
60	4.0	1.2	3.1	29.1	1.80	23.0	99.9	4.75	3.0	30.0	21.4	0.72	1.40	34.7	21.4	1.8
	6.0	2.4	6.4	30.1	1.81	23.9	101.0	4.89	3.0	30.0	21.5	0.71	1.35	34.7	22.2	1.7
	8.0	3.9	10.7	30.7	1.82	24.5	101.6	4.93	3.1	30.4	21.5	0.71	1.32	34.9	22.9	1.6
70	4.0	1.2	3.0	32.4	1.87	26.0	103.3	5.08	3.3	30.1	21.7	0.72	1.54	35.4	19.5	2.2
	6.0	2.4	6.2	33.5	1.88	27.1	104.5	5.22	3.4	30.2	21.7	0.72	1.49	35.3	20.3	2.1
	8.0	3.9	10.4	34.1	1.90	27.6	105.1	5.24	3.5	30.6	21.8	0.71	1.46	35.5	20.9	2.0
80	4.0	1.2	2.9	35.1	1.93	28.5	106.1	5.32	3.7	28.9	21.4	0.74	1.70	34.7	17.0	2.8
	6.0	2.3	5.9	36.4	1.95	29.7	107.4	5.46	3.8	29.0	21.4	0.74	1.64	34.6	17.7	2.7
	8.0	3.8	10.0	36.9	1.98	30.2	108.0	5.48	3.9	29.3	21.5	0.73	1.61	34.8	18.2	2.5
90	4.0	1.1	2.8	37.9	2.01	31.0	108.9	5.51	4.2	26.7	20.2	0.76	1.87	33.1	14.3	3.5
	6.0	2.2	5.7	39.3	2.04	32.3	110.4	5.64	4.3	26.9	20.2	0.75	1.80	33.0	14.9	3.3
	8.0	3.6	9.6	39.9	2.06	32.8	111.0	5.66	4.4	27.1	20.3	0.75	1.77	33.2	15.3	3.2
100	4.0	11.1	2.7	Operation not recommended						Operation not recommended						
	6.0	2.1	5.5							25.6	20.2	0.79	2.01	32.5	12.8	4.1
	8.0	3.5	9.3							25.9	20.3	0.78	1.97	32.6	13.1	3.9
110	4.0	1.0	2.6							Operation not recommended						
	6.0	2.0	5.3							21.7	18.9	0.87	2.22	29.3	9.8	5.0
	8.0	3.4	8.9							22.0	19.0	0.87	2.17	29.4	10.1	4.7
120	4.0	1.0	2.5							Operation not recommended						
	6.0	2.0	5.1							21.0	18.3	0.87	2.47	29.5	8.5	6.0
	8.0	3.2	8.6							21.3	18.3	0.86	2.42	29.5	8.8	5.7

2/10/12

WaterFurnace works continually to improve its products. As a result, the design and specifications of each product at the time of order may be changed without notice. Please contact WaterFurnace at 1-888-929-2837 for latest design and specifications. Purchaser's approval of this data set signifies that the equipment is acceptable under the provisions of the job specification. Statements and other information contained herein are not express warranties and do not form the basis of any bargain between the parties, but are merely WaterFurnace's opinion or commendation of its products. The latest version of this document is available at www.waterfurnace.com.

Performance Data cont.

NS036 - Single Speed PSC (1250 cfm)

EWT °F	Flow Rate GPM	WPD		HEATING - EAT 70°F						COOLING - EAT 80/67 °F						
		PSI	FT	HC Mbtu/h	Power kW	HE Mbtu/h	LAT °F	COP	HWC Mbtu/h	TC Mbtu/h	SC MBtu/h	S/T Ratio	Power kW	HR kBtuh	EER	HWC MBtu/h
20	5.0	1.0	2.4	Operation not recommended						Operation not recommended						
	7.0	2.1	4.9													
	9.0	3.6	8.2	21.8	1.99	15.0	86.1	3.21	2.4							
30	5.0	1.0	2.3	Operation not recommended						Operation not recommended						
	7.0	2.1	4.7	24.5	1.99	17.7	88.1	3.60	2.6	30.6	22.0	0.72	1.26	33.1	24.4	---
	9.0	3.5	8.0	25.0	2.01	18.1	88.5	3.64	2.7	31.1	21.4	0.69	1.22	33.5	25.6	---
40	5.0	1.0	2.3	Operation not recommended						Operation not recommended						
	7.0	2.0	4.6	28.4	2.04	21.5	91.1	4.09	3.0	33.6	23.9	0.71	1.36	36.0	24.8	---
	9.0	3.4	7.8	29.0	2.06	22.0	91.5	4.14	3.0	34.1	23.9	0.70	1.32	36.5	25.8	---
50	5.0	1.0	2.2	30.9	2.07	23.8	92.9	4.37	3.2	36.3	25.9	0.71	1.53	38.7	23.7	1.7
	7.0	1.9	4.5	32.0	2.08	24.9	93.7	4.51	3.3	36.4	26.0	0.72	1.48	38.8	24.6	1.6
	9.0	3.3	7.5	32.6	2.10	25.5	94.2	4.56	3.4	36.8	26.0	0.71	1.45	39.2	25.5	1.6
60	5.0	0.9	2.1	34.7	2.11	27.5	95.7	4.81	3.6	36.0	26.5	0.74	1.65	38.5	21.8	2.1
	7.0	1.9	4.3	35.9	2.12	28.6	96.6	4.95	3.7	36.1	26.6	0.74	1.60	38.6	22.6	2.0
	9.0	3.1	7.3	36.6	2.15	29.2	97.1	4.99	3.8	36.5	26.6	0.73	1.56	39.0	23.4	1.9
70	5.0	0.9	2.1	38.6	2.16	31.3	98.6	5.24	4.1	36.5	27.5	0.75	1.81	39.1	20.1	2.6
	7.0	1.8	4.2	40.0	2.18	32.6	99.6	5.38	4.2	36.6	27.5	0.75	1.75	39.2	20.9	2.5
	9.0	3.0	7.0	40.7	2.20	33.2	100.1	5.41	4.3	37.0	27.6	0.75	1.72	39.6	21.6	2.4
80	5.0	0.9	2.0	41.8	2.20	34.3	101.0	5.57	4.6	35.6	27.4	0.77	1.99	38.3	17.9	3.3
	7.0	1.7	4.0	43.4	2.23	35.8	102.1	5.71	4.7	35.8	27.4	0.76	1.91	38.4	18.7	3.1
	9.0	2.9	6.8	44.1	2.25	36.4	102.6	5.73	4.8	36.2	27.5	0.76	1.88	38.8	19.2	3.0
90	5.0	0.8	1.9	45.3	2.25	37.6	103.5	5.89	5.1	33.4	26.6	0.80	2.17	36.1	15.4	4.1
	7.0	1.7	3.9	47.0	2.28	39.2	104.8	6.03	5.3	33.6	26.6	0.79	2.09	36.3	16.1	3.9
	9.0	2.8	6.6	47.7	2.31	39.8	105.3	6.05	5.4	33.9	26.7	0.79	2.05	36.6	16.5	3.7
100	5.0	0.8	1.8	Operation not recommended						Operation not recommended						
	7.0	1.6	3.8							32.7	26.3	0.81	2.31	35.4	14.1	4.8
	9.0	2.7	6.3							33.0	26.5	0.80	2.27	35.7	14.5	4.6
110	5.0	0.8	1.8							Operation not recommended						
	7.0	1.6	3.6							29.4	24.5	0.83	2.54	32.2	11.6	5.9
	9.0	2.6	6.1							29.7	24.6	0.83	2.49	32.5	11.9	5.6
120	5.0	0.7	1.7							Operation not recommended						
	7.0	1.5	3.5							27.5	24.1	0.88	2.81	30.5	9.8	7.1
	9.0	2.5	5.8							27.8	24.2	0.87	2.75	30.8	10.1	6.7

2/10/12

WaterFurnace works continually to improve its products. As a result, the design and specifications of each product at the time of order may be changed without notice. Please contact WaterFurnace at 1-888-929-2837 for latest design and specifications. Purchaser's approval of this data set signifies that the equipment is acceptable under the provisions of the job specification. Statements and other information contained herein are not express warranties and do not form the basis of any bargain between the parties, but are merely WaterFurnace's opinion or commendation of its products. The latest version of this document is available at www.waterfurnace.com.

Performance Data cont.

NS042 - Single Speed PSC (1350 cfm)

EWT °F	Flow Rate GPM	WPD		HEATING - EAT 70°F						COOLING - EAT 80/67 °F						
		PSI	FT	HC Mbtu/h	Power kW	HE Mbtu/h	LAT °F	COP	HWC Mbtu/h	TC Mbtu/h	SC MBtu/h	S/T Ratio	Power kW	HR kBtuh	EER	HWC MBtu/h
20	5.0	0.8	1.9	Operation not recommended						Operation not recommended						
	8.0	2.3	5.3													
	11.0	4.4	10.3	25.4	2.41	17.1	87.4	3.09	3.7							
30	5.0	0.8	1.8	Operation not recommended						Operation not recommended						
	8.0	2.2	5.1	29.3	2.45	21.0	90.1	3.51	3.9	41.0	28.4	0.69	1.73	43.4	23.8	---
	11.0	4.3	10.0	29.7	2.45	21.4	90.4	3.56	4.0	41.4	27.8	0.67	1.69	43.7	24.6	---
40	5.0	0.8	1.8	Operation not recommended						Operation not recommended						
	8.0	2.1	4.9	33.3	2.52	24.7	92.9	3.88	4.3	42.7	29.7	0.70	1.81	45.1	23.5	---
	11.0	4.2	9.7	33.9	2.52	25.3	93.3	3.94	4.4	43.1	29.7	0.69	1.77	45.5	24.4	---
50	5.0	0.7	1.7	35.8	2.52	27.2	94.6	4.16	4.7	43.3	30.7	0.71	2.01	45.7	21.6	2.6
	8.0	2.1	4.8	37.3	2.57	28.5	95.6	4.26	4.8	43.8	31.0	0.71	1.93	46.2	22.7	2.5
	11.0	4.1	9.4	38.0	2.58	29.3	96.1	4.33	5.0	44.2	31.0	0.70	1.88	46.6	23.5	2.4
60	5.0	0.7	1.7	39.3	2.57	30.5	97.0	4.48	5.3	43.1	31.4	0.73	2.17	45.6	19.8	3.2
	8.0	2.0	4.6	41.1	2.63	32.1	98.2	4.58	5.4	43.6	31.7	0.73	2.08	46.1	20.9	3.0
	11.0	3.9	9.1	42.0	2.65	33.0	98.8	4.66	5.6	44.1	31.7	0.72	2.03	46.5	21.7	2.9
70	5.0	0.7	1.6	42.7	2.63	33.7	99.3	4.76	6.0	43.1	32.4	0.75	2.37	45.7	18.2	4.0
	8.0	1.9	4.5	44.8	2.70	35.5	100.7	4.86	6.1	43.8	32.8	0.75	2.26	46.4	19.4	3.8
	11.0	3.8	8.8	45.9	2.73	36.6	101.5	4.94	6.3	44.3	32.8	0.74	2.21	46.8	20.1	3.6
80	5.0	0.7	1.6	45.9	2.65	36.9	101.5	5.09	6.7	41.4	31.7	0.77	2.59	44.0	15.9	5.1
	8.0	1.9	4.3	48.4	2.73	39.0	103.2	5.18	6.9	42.1	32.0	0.76	2.47	44.7	17.0	4.8
	11.0	3.7	8.5	49.8	2.77	40.3	104.1	5.28	7.1	42.6	32.0	0.75	2.41	45.1	17.7	4.6
90	5.0	0.7	1.5	49.1	2.68	40.0	103.7	5.37	7.5	39.0	30.8	0.79	2.86	41.7	13.7	6.4
	8.0	1.8	4.2	51.8	2.78	42.4	105.6	5.47	7.8	39.8	31.1	0.78	2.72	42.5	14.7	6.1
	11.0	3.5	8.2	53.5	2.82	43.9	106.7	5.57	8.0	40.2	31.1	0.77	2.64	42.9	15.2	5.8
100	5.0	0.6	1.5	Operation not recommended						Operation not recommended						
	8.0	1.7	4.0							38.2	30.5	0.80	2.98	40.9	12.8	7.5
	11.0	3.4	7.9							38.6	30.5	0.79	2.91	41.3	13.3	7.2
110	5.0	0.6	1.4							Operation not recommended						
	8.0	1.7	3.9							34.6	28.2	0.82	3.29	37.4	10.5	9.2
	11.0	3.3	7.6							35.0	28.2	0.81	3.20	37.7	10.9	8.8
120	5.0	0.6	1.3							Operation not recommended						
	8.0	1.6	3.7							32.5	27.9	0.86	3.61	35.4	9.0	11.1
	11.0	3.2	7.3							32.8	27.9	0.85	3.52	35.7	9.3	10.6

2/10/12

WaterFurnace works continually to improve its products. As a result, the design and specifications of each product at the time of order may be changed without notice. Please contact WaterFurnace at 1-888-929-2837 for latest design and specifications. Purchaser's approval of this data set signifies that the equipment is acceptable under the provisions of the job specification. Statements and other information contained herein are not express warranties and do not form the basis of any bargain between the parties, but are merely WaterFurnace's opinion or commendation of its products. The latest version of this document is available at www.waterfurnace.com.

Performance Data cont.

NS048 - Single Speed PSC (1500 cfm)

EWT °F	Flow Rate GPM	WPD		HEATING - EAT 70°F						COOLING - EAT 80/67 °F						
		PSI	FT	HC MBtu/h	Power kW	HE MBtu/h	LAT °F	COP	HWC MBtu/h	TC MBtu/h	SC MBtu/h	S/T Ratio	Power kW	HR kBtuh	EER	HWC MBtu/h
20	6.0	1.1	2.6	Operation not recommended						Operation not recommended						
	9.0	2.3	5.4													
	12.0	4.0	9.2	32.8	3.05	22.4	90.2	3.15	4.8							
30	6.0	1.1	2.5	Operation not recommended						Operation not recommended						
	9.0	2.3	5.3	37.5	3.13	26.8	93.1	3.51	5.2	49.7	34.1	0.69	1.90	52.0	26.1	---
	12.0	3.9	9.0	38.0	3.13	27.3	93.5	3.56	5.3	50.2	33.5	0.67	1.85	52.5	27.1	---
40	6.0	1.1	2.5	Operation not recommended						Operation not recommended						
	9.0	2.2	5.1	43.0	3.23	32.0	96.6	3.90	5.7	51.5	35.3	0.69	2.06	53.9	25.0	---
	12.0	3.8	8.7	43.8	3.24	32.7	97.0	3.96	5.8	52.1	35.3	0.68	2.01	54.4	25.9	---
50	6.0	1.0	2.4	46.2	3.26	35.1	98.5	4.16	6.2	52.5	36.7	0.70	2.35	54.9	22.3	3.1
	9.0	2.1	4.9	48.1	3.32	36.7	99.7	4.25	6.4	53.1	37.1	0.70	2.26	55.5	23.5	2.9
	12.0	3.7	8.4	49.0	3.33	37.7	100.3	4.31	6.5	53.6	37.1	0.69	2.20	56.0	24.4	2.8
60	6.0	1.0	2.3	50.8	3.33	39.5	101.4	4.48	7.0	51.1	36.3	0.71	2.58	53.5	19.8	3.7
	9.0	2.1	4.8	53.1	3.41	41.5	102.8	4.57	7.2	51.8	36.6	0.71	2.47	54.2	21.0	3.6
	12.0	3.5	8.2	54.4	3.43	42.7	103.6	4.64	7.4	52.3	36.6	0.70	2.40	54.7	21.8	3.4
70	6.0	1.0	2.2	55.5	3.41	43.9	104.3	4.78	7.9	50.8	36.7	0.72	2.86	53.2	17.8	4.7
	9.0	2.0	4.6	58.2	3.51	46.3	105.9	4.87	8.1	51.5	37.1	0.72	2.72	54.0	18.9	4.5
	12.0	3.4	7.9	59.7	3.54	47.7	106.9	4.95	8.3	52.1	37.1	0.71	2.65	54.5	19.6	4.2
80	6.0	0.9	2.1	59.4	3.46	47.5	106.6	5.03	8.8	48.5	35.9	0.74	3.17	51.0	15.3	5.9
	9.0	1.9	4.5	62.5	3.58	50.3	108.6	5.11	9.1	49.4	36.2	0.73	3.01	51.9	16.4	5.6
	12.0	3.3	7.6	64.3	3.62	51.9	109.7	5.20	9.4	49.9	36.2	0.73	2.93	52.4	17.0	5.4
90	6.0	0.9	2.1	63.2	3.52	51.2	109.0	5.26	9.9	45.1	34.2	0.76	3.50	47.7	12.9	7.4
	9.0	1.9	4.3	66.8	3.66	54.3	111.2	5.35	10.2	46.0	34.6	0.75	3.32	48.6	13.9	7.1
	12.0	3.2	7.4	68.9	3.71	56.2	112.5	5.44	10.6	46.5	34.6	0.74	3.23	49.0	14.4	6.7
100	6.0	0.9	2.0	Operation not recommended						Operation not recommended						
	9.0	1.8	4.2							44.3	34.1	0.77	3.69	46.9	12.0	8.8
	12.0	3.1	7.1							44.8	34.1	0.76	3.58	47.4	12.5	8.4
110	6.0	0.8	1.9							Operation not recommended						
	9.0	1.7	4.0							39.9	31.7	0.79	4.07	42.6	9.8	10.8
	12.0	3.0	6.8							40.3	31.7	0.79	3.96	43.0	10.2	10.2
120	6.0	0.8	1.8							Operation not recommended						
	9.0	1.7	3.8							37.6	31.1	0.83	4.50	40.4	8.4	13.0
	12.0	2.8	6.6							38.0	31.1	0.82	4.38	40.8	8.7	12.4

2/10/12

WaterFurnace works continually to improve its products. As a result, the design and specifications of each product at the time of order may be changed without notice. Please contact WaterFurnace at 1-888-929-2837 for latest design and specifications. Purchaser's approval of this data set signifies that the equipment is acceptable under the provisions of the job specification. Statements and other information contained herein are not express warranties and do not form the basis of any bargain between the parties, but are merely WaterFurnace's opinion or commendation of its products. The latest version of this document is available at www.waterfurnace.com.

Performance Data cont.

NS060 - Single Speed PSC (2000 cfm)

EWT °F	Flow Rate GPM	WPD		HEATING - EAT 70°F						COOLING - EAT 80/67 °F						
		PSI	FT	HC Mbtu/h	Power kW	HE Mbtu/h	LAT °F	COP	HWC Mbtu/h	TC Mbtu/h	SC MBtu/h	S/T Ratio	Power kW	HR kBtuh	EER	HWC MBtu/h
20	9.0	2.5	5.7	Operation not recommended						Operation not recommended						
	12.0	4.0	9.2													
	15.0	5.9	13.5	40.4	4.06	26.5	88.7	2.92	5.8							
30	9.0	2.4	5.5	Operation not recommended						Operation not recommended						
	12.0	3.9	8.9	45.4	4.06	31.5	91.0	3.28	6.2	68.8	47.6	0.69	2.91	71.2	23.7	---
	15.0	5.7	13.1	46.8	4.16	32.6	91.7	3.30	6.4	70.0	48.1	0.69	2.74	72.3	25.6	---
40	9.0	2.3	5.3	Operation not recommended						Operation not recommended						
	12.0	3.7	8.7	53.6	4.23	39.1	94.8	3.71	6.9	70.3	49.8	0.71	3.10	72.7	22.7	---
	15.0	5.5	12.7	54.8	4.30	40.1	95.4	3.73	7.1	71.1	49.6	0.70	2.95	73.5	24.1	---
50	9.0	2.2	5.2	58.9	4.35	44.1	97.3	3.97	7.5	71.4	50.5	0.71	3.44	73.8	20.8	4.1
	12.0	3.6	8.4	60.4	4.39	45.5	98.0	4.04	7.7	71.4	51.0	0.71	3.38	73.9	21.1	3.9
	15.0	5.3	12.3	61.5	4.43	46.4	98.5	4.07	7.9	72.2	51.0	0.71	3.23	74.6	22.3	3.7
60	9.0	2.2	5.0	65.4	4.47	50.1	100.3	4.29	8.4	69.1	49.4	0.71	3.63	71.5	19.0	5.0
	12.0	3.5	8.1	66.8	4.51	51.4	100.9	4.34	8.7	69.4	49.6	0.71	3.53	71.9	19.7	4.8
	15.0	5.2	11.9	68.7	4.58	53.1	101.8	4.40	8.9	69.8	49.9	0.71	3.41	72.2	20.5	4.6
70	9.0	2.1	4.9	72.0	4.60	56.3	103.4	4.59	9.5	67.8	49.4	0.73	3.97	70.3	17.1	6.3
	12.0	3.4	7.9	73.4	4.65	57.5	104.0	4.63	9.8	68.5	49.4	0.72	3.83	71.0	17.9	6.0
	15.0	5.0	11.6	76.1	4.74	59.9	105.2	4.71	10.0	68.5	49.9	0.73	3.73	71.0	18.4	5.7
80	9.0	2.0	4.7	76.7	4.71	60.7	105.5	4.78	10.7	64.8	48.0	0.74	4.35	67.3	14.9	8.0
	12.0	3.3	7.6	79.4	4.73	63.2	106.7	4.92	11.0	65.4	48.0	0.73	4.16	67.9	15.7	7.6
	15.0	4.8	11.2	81.5	4.87	64.9	107.7	4.91	11.3	65.8	48.5	0.74	4.05	68.3	16.2	7.2
90	9.0	2.0	4.5	81.6	4.83	65.2	107.8	4.96	12.0	60.3	45.8	0.76	4.74	62.9	12.7	10.0
	12.0	3.2	7.3	85.5	4.83	69.1	109.6	5.19	12.4	61.0	45.8	0.75	4.49	63.5	13.6	9.5
	15.0	4.7	10.8	87.2	5.02	70.1	110.4	5.09	12.8	61.6	46.3	0.75	4.37	64.1	14.1	9.1
100	9.0	1.9	4.4	Operation not recommended						Operation not recommended						
	12.0	3.1	7.1							58.5	45.0	0.77	4.99	61.1	11.7	11.8
	15.0	4.5	10.4							59.1	45.5	0.77	4.87	61.7	12.1	11.2
110	9.0	1.8	4.2							Operation not recommended						
	12.0	2.9	6.8							53.4	41.8	0.78	5.43	56.1	9.8	14.5
	15.0	4.3	10.0							54.0	42.3	0.78	5.30	56.6	10.2	13.8
120	9.0	1.7	4.0							Operation not recommended						
	12.0	2.8	6.5							49.8	41.5	0.83	6.09	52.6	8.2	17.5
	15.0	4.2	9.6							50.7	41.9	0.83	5.92	53.5	8.6	16.7

2/10/12

WaterFurnace works continually to improve its products. As a result, the design and specifications of each product at the time of order may be changed without notice. Please contact WaterFurnace at 1-888-929-2837 for latest design and specifications. Purchaser's approval of this data set signifies that the equipment is acceptable under the provisions of the job specification. Statements and other information contained herein are not express warranties and do not form the basis of any bargain between the parties, but are merely WaterFurnace's opinion or commendation of its products. The latest version of this document is available at www.waterfurnace.com.

Performance Data cont.

NS070 - Single Speed PSC (2200 cfm)

EWT °F	Flow Rate GPM	WPD		HEATING - EAT 70°F						COOLING - EAT 80/67 °F						
		PSI	FT	HC Mbtu/h	Power kW	HE Mbtu/h	LAT °F	COP	HWC Mbtu/h	TC Mbtu/h	SC MBtu/h	S/T Ratio	Power kW	HR kBtuh	EER	HWC MBtu/h
20	12.0	3.0	7.0	Operation not recommended						Operation not recommended						
	15.0	4.4	10.2													
	18.0	6.0	13.9	46.9	4.62	31.2	89.8	2.98	6.9							
30	12.0	3.0	6.8	Operation not recommended						Operation not recommended						
	15.0	4.3	9.9	54.1	4.73	37.9	92.8	3.35	7.4	72.1	48.7	0.68	2.87	74.4	25.1	---
	18.0	5.8	13.5	54.3	4.75	38.1	92.8	3.35	7.6	72.5	49.1	0.68	2.86	74.8	25.3	---
40	12.0	2.9	6.6	Operation not recommended						Operation not recommended						
	15.0	4.1	9.6	63.1	4.89	46.4	96.5	3.78	8.2	75.8	52.8	0.70	3.11	78.2	24.4	---
	18.0	5.7	13.1	63.5	4.91	46.7	96.7	3.79	8.4	76.4	52.6	0.69	3.09	78.7	24.7	---
50	12.0	2.8	6.4	69.5	5.00	52.4	99.3	4.07	8.9	79.1	55.5	0.70	3.51	81.5	22.5	4.5
	15.0	4.0	9.3	70.9	5.04	53.7	99.9	4.13	9.2	79.5	55.7	0.70	3.41	81.9	23.3	4.3
	18.0	5.5	12.7	71.6	5.06	54.3	100.1	4.14	9.4	80.3	56.0	0.70	3.38	82.7	23.8	4.1
60	12.0	2.7	6.2	77.1	5.15	59.5	102.4	4.39	10.0	75.8	53.7	0.71	3.81	78.2	19.9	5.5
	15.0	3.9	9.0	79.3	5.21	61.6	103.4	4.47	10.3	76.1	53.9	0.71	3.70	78.6	20.6	5.2
	18.0	5.3	12.3	80.3	5.24	62.4	103.8	4.49	10.6	77.1	54.6	0.71	3.65	79.5	21.1	5.0
70	12.0	2.6	6.0	85.1	5.31	66.9	105.8	4.69	11.3	75.2	54.5	0.72	4.19	77.7	17.9	6.9
	15.0	3.8	8.7	88.2	5.39	69.8	107.1	4.79	11.6	75.5	54.6	0.72	4.08	78.0	18.5	6.6
	18.0	5.1	11.9	89.4	5.43	70.9	107.6	4.83	11.9	76.7	55.8	0.73	4.01	79.1	19.1	6.3
80	12.0	2.5	5.8	91.0	5.46	72.3	108.3	4.89	12.7	71.9	52.2	0.73	4.61	74.3	15.6	8.7
	15.0	3.6	8.4	95.1	5.56	76.2	110.0	5.01	13.1	72.1	52.2	0.72	4.49	74.6	16.1	8.3
	18.0	5.0	11.5	96.8	5.60	77.6	110.7	5.06	13.5	73.3	53.8	0.73	4.40	75.8	16.7	7.9
90	12.0	2.4	5.6	97.3	5.62	78.1	110.9	5.07	14.3	65.7	48.5	0.74	5.06	68.2	13.0	10.9
	15.0	3.5	8.1	102.5	5.75	82.9	113.1	5.23	14.7	65.9	48.4	0.73	4.93	68.4	13.4	10.4
	18.0	4.8	11.1	104.5	5.80	84.7	114.0	5.28	15.2	67.2	50.3	0.75	4.81	69.7	14.0	9.9
100	12.0	2.3	5.4	Operation not recommended						Operation not recommended						
	15.0	3.4	7.8							63.7	47.8	0.75	5.47	66.3	11.6	13.0
	18.0	4.6	10.7							65.1	50.2	0.77	5.33	67.7	12.2	12.3
110	12.0	2.2	5.2							Operation not recommended						
	15.0	3.3	7.5							56.2	42.5	0.76	6.03	58.8	9.3	15.9
	18.0	4.4	10.2							57.6	45.0	0.78	5.85	60.3	9.9	15.1
120	12.0	2.2	5.0							Operation not recommended						
	15.0	3.1	7.2							53.2	43.1	0.81	6.69	55.9	7.9	19.2
	18.0	4.3	9.8							54.6	46.0	0.84	6.47	57.5	8.4	18.2

2/10/12

WaterFurnace works continually to improve its products. As a result, the design and specifications of each product at the time of order may be changed without notice. Please contact WaterFurnace at 1-888-929-2837 for latest design and specifications. Purchaser's approval of this data set signifies that the equipment is acceptable under the provisions of the job specification. Statements and other information contained herein are not express warranties and do not form the basis of any bargain between the parties, but are merely WaterFurnace's opinion or commendation of its products. The latest version of this document is available at www.waterfurnace.com.

Performance Data cont.

NS018 - Single Speed with Variable Speed ECM (600 cfm)

EWT °F	Flow Rate GPM	WPD		Heating - EAT 70°F							Cooling - EAT 80/67 °F							
		psi	ft/hd	Airflow cfm	HC MBtu/h	Power kW	HE MBtu/h	LAT °F	COP	HWC MBtu/h	Airflow cfm	TC MBtu/h	SC MBtu/h	S/T Ratio	Power kW	HR MBtu/h	EER	HWC MBtu/h
20	3.0	1.8	4.1	Operation not recommended							Operation not recommended							
	4.0	3.0	6.9															
	5.0	4.3	9.9	500	12.3	1.09	8.6	90.8	3.30	1.6								
				600	12.7	1.12	8.9	87.6	3.34	1.5								
30	3.0	1.7	3.9	Operation not recommended							Operation not recommended							
	4.0	3.0	6.8	500	13.9	1.16	10.0	93.8	3.51	1.6	500	19.0	11.6	0.61	0.65	21.2	29.4	--
				600	14.4	1.19	10.3	90.2	3.55	1.6	600	19.5	12.9	0.66	0.70	21.9	28.1	--
	5.0	4.2	9.7	500	14.2	1.17	10.2	94.2	3.54	1.7	500	18.3	11.2	0.61	0.63	20.4	29.1	--
				600	14.6	1.20	10.5	90.5	3.58	1.6	600	18.8	12.4	0.66	0.68	21.1	27.9	--
40	3.0	1.7	3.8	Operation not recommended							Operation not recommended							
	4.0	2.9	6.7	500	15.4	1.22	11.2	96.5	3.70	1.8	500	19.4	11.7	0.60	0.69	21.8	28.0	--
				600	15.9	1.24	11.6	92.5	3.74	1.6	600	20.0	13.0	0.65	0.75	22.5	26.8	--
	5.0	4.2	9.6	500	15.8	1.23	11.6	97.2	3.76	1.8	500	19.2	11.5	0.60	0.64	21.4	29.9	--
				600	16.3	1.26	12.0	93.1	3.79	1.7	600	19.8	12.8	0.65	0.69	22.1	28.6	--
50	3.0	1.6	3.7	500	16.6	1.27	12.3	98.7	3.83	1.9	500	19.6	11.9	0.61	0.82	22.4	23.8	0.9
				600	17.1	1.30	12.7	94.4	3.87	1.7	600	20.1	13.2	0.66	0.89	23.1	22.7	1.0
	4.0	2.9	6.6	500	17.0	1.28	12.6	99.4	3.89	1.9	500	19.8	11.8	0.60	0.74	22.4	26.8	0.8
				600	17.5	1.31	13.0	95.0	3.93	1.8	600	20.4	13.2	0.64	0.80	23.1	25.7	0.9
	5.0	4.2	9.6	500	17.4	1.29	13.0	100.2	3.95	1.9	500	20.1	11.8	0.59	0.66	22.4	30.7	0.8
				600	17.9	1.32	13.4	95.6	3.99	1.9	600	20.7	13.1	0.63	0.71	23.1	29.4	0.9
60	3.0	1.6	3.6	500	18.5	1.33	13.9	102.2	4.08	2.1	500	18.7	11.4	0.61	0.87	21.6	21.5	1.0
				600	19.1	1.36	14.4	97.4	4.12	2.0	600	19.2	12.7	0.66	0.94	22.4	20.5	1.1
	4.0	2.8	6.6	500	18.8	1.34	14.3	102.9	4.11	2.1	500	18.9	11.4	0.60	0.81	21.7	23.2	1.0
				600	19.4	1.37	14.8	98.0	4.16	2.0	600	19.4	12.6	0.65	0.88	22.4	22.2	1.1
	5.0	4.1	9.5	500	19.2	1.36	14.6	103.6	4.15	2.2	500	19.1	11.3	0.59	0.76	21.7	25.2	0.9
				600	19.8	1.39	15.1	98.6	4.19	2.0	600	19.6	12.6	0.64	0.82	22.4	24.0	1.0
70	3.0	1.5	3.5	500	20.4	1.39	15.6	105.7	4.31	2.4	500	17.8	10.9	0.61	0.92	20.9	19.4	1.2
				600	21.0	1.42	16.2	100.4	4.35	2.2	600	18.3	12.1	0.66	0.99	21.7	18.6	1.3
	4.0	2.8	6.5	500	20.7	1.41	15.9	106.4	4.32	2.4	500	17.9	10.9	0.61	0.89	20.9	20.2	1.1
				600	21.4	1.44	16.5	100.9	4.36	2.2	600	18.4	12.1	0.66	0.96	21.7	19.3	1.3
	5.0	4.1	9.5	500	21.0	1.43	16.2	107.0	4.33	2.4	500	18.0	10.9	0.60	0.86	20.9	20.9	1.1
				600	21.7	1.46	16.7	101.5	4.37	2.2	600	18.5	12.1	0.65	0.93	21.7	20.0	1.2
80	3.0	1.5	3.4	500	22.6	1.45	17.7	109.9	4.57	2.7	500	17.0	10.4	0.61	0.97	20.3	17.6	1.6
				600	23.3	1.48	18.3	104.0	4.62	2.5	600	17.5	11.6	0.66	1.04	21.0	16.8	1.7
	4.0	2.8	6.4	500	22.9	1.48	17.9	110.4	4.55	2.7	500	17.0	10.4	0.61	0.97	20.3	17.5	1.5
				600	23.6	1.51	18.5	104.5	4.60	2.4	600	17.5	11.6	0.66	1.05	21.1	16.7	1.6
	5.0	4.1	9.4	500	23.3	1.49	18.2	111.1	4.58	2.7	500	17.2	10.6	0.62	0.95	20.4	18.1	1.4
				600	24.0	1.52	18.8	105.0	4.63	2.5	600	17.7	11.8	0.67	1.02	21.1	17.3	1.5
90	3.0	1.4	3.2	500	25.1	1.52	19.9	114.4	4.85	3.0	500	16.2	10.0	0.62	1.02	19.7	15.9	1.9
				600	25.8	1.55	20.6	107.9	4.90	2.8	600	16.7	11.1	0.67	1.10	20.4	15.2	2.1
	4.0	2.7	6.3	500	25.3	1.55	20.0	114.9	4.79	3.0	500	16.2	10.0	0.62	1.07	19.8	15.1	1.8
				600	26.1	1.58	20.7	108.3	4.84	2.8	600	16.6	11.1	0.67	1.15	20.5	14.5	2.0
	5.0	4.0	9.2	500	25.5	1.55	20.2	115.2	4.81	3.1	500	16.3	10.3	0.63	1.04	19.9	15.7	1.7
				600	26.3	1.59	20.9	108.6	4.86	2.9	600	16.8	11.4	0.68	1.12	20.6	15.0	1.9
100	3.0	1.4	3.1	Operation not recommended							Operation not recommended							
	4.0	2.7	6.2								500	15.3	9.6	0.63	1.17	19.3	13.1	2.2
											600	15.8	10.7	0.68	1.26	20.1	12.5	2.4
	5.0	4.0	9.1								500	15.3	9.9	0.65	1.19	19.4	12.9	2.0
											600	15.8	11.1	0.70	1.28	20.1	12.3	2.3
110	3.0	1.3	3.0								Operation not recommended							
	4.0	2.7	6.1								500	14.6	9.2	0.63	1.28	19.0	11.4	2.9
											600	15.0	10.2	0.68	1.38	19.7	10.9	3.2
	5.0	3.9	9.0								500	14.3	9.6	0.67	1.33	18.9	10.7	2.6
											600	14.7	10.7	0.73	1.44	19.6	10.2	3.0
120	3.0	1.3	2.9								Operation not recommended							
	4.0	2.6	6.1								500	13.8	8.8	0.64	1.41	18.6	9.8	3.5
											600	14.2	9.8	0.69	1.51	19.4	9.4	4.0
	5.0	3.9	8.9								500	13.3	9.2	0.69	1.48	18.4	9.0	3.1
											600	13.7	10.2	0.74	1.60	19.1	8.6	3.5

10/1/10

WaterFurnace works continually to improve its products. As a result, the design and specifications of each product at the time of order may be changed without notice. Please contact WaterFurnace at 1-888-929-2837 for latest design and specifications. Purchaser's approval of this data set signifies that the equipment is acceptable under the provisions of the job specification. Statements and other information contained herein are not express warranties and do not form the basis of any bargain between the parties, but are merely WaterFurnace's opinion or commendation of its products. The latest version of this document is available at www.waterfurnace.com.

Performance Data cont.

NS022 - Single Speed with Variable Speed or 5-Speed ECM (700 cfm)

EWT °F	Flow Rate GPM	WPD		HEATING - EAT 70°F							COOLING - EAT 80/67 °F							
		PSI	FT/HD	Airflow CFM	HC MBtu/h	Power kW	HE MBtu/h	LAT °F	COP	HWC Mbtu/h	Airflow CFM	TC Mbtu/h	SC Mbtu/h	S/T Ratio	Power kW	HR Mbtu/h	EER	HWC Mbtu/h
20	3.0	0.9	2.2	Operation not recommended							Operation not recommended							
	4.5	1.8	4.2															
	6.0	2.9	6.8	600	12.0	1.16	8.0	88.4	3.03	1.6								
				700	12.1	1.17	8.1	86.0	3.04	1.5								
30	3.0	0.9	2.1	Operation not recommended							Operation not recommended							
	4.5	1.7	4.0	600	14.0	1.17	10.0	91.6	3.53	1.7	600	23.4	15.8	0.68	0.66	25.7	35.6	---
				700	14.3	1.18	10.3	88.9	3.57	1.6	700	23.8	17.3	0.73	0.69	26.2	34.4	---
	6.0	2.8	6.6	600	14.3	1.18	10.3	92.1	3.57	1.8	600	23.6	15.8	0.67	0.64	25.7	36.9	---
				700	14.5	1.19	10.5	89.2	3.59	1.6	700	24.1	17.3	0.72	0.67	26.4	36.0	---
40	3.0	0.9	2.0	Operation not recommended							Operation not recommended							
	4.5	1.7	3.9	600	16.5	1.19	12.5	95.5	4.06	1.9	600	24.9	16.3	0.65	0.71	27.3	35.3	---
				700	16.9	1.20	12.8	92.3	4.12	1.8	700	25.4	17.8	0.70	0.74	27.9	34.3	---
	6.0	2.8	6.4	600	16.8	1.21	12.7	96.0	4.08	2.0	600	25.1	16.3	0.65	0.68	27.5	36.7	---
				700	17.1	1.21	13.0	92.7	4.16	1.8	700	25.7	17.8	0.69	0.72	28.1	35.9	---
50	3.0	0.9	2.0	600	18.0	1.20	13.9	97.7	4.39	2.1	600	25.4	16.0	0.63	0.83	28.2	30.7	1.1
				700	18.3	1.20	14.2	94.2	4.48	2.0	700	25.9	17.5	0.67	0.86	28.8	30.1	1.2
	4.5	1.6	3.8	600	18.9	1.23	14.7	99.1	4.51	2.2	600	25.6	16.2	0.63	0.79	28.3	32.6	1.0
				700	19.2	1.23	15.0	95.4	4.60	2.0	700	26.2	17.7	0.67	0.82	29.0	31.9	1.1
	6.0	2.7	6.2	600	19.1	1.24	14.9	99.5	4.51	2.2	600	25.9	16.2	0.63	0.76	28.5	34.0	1.0
				700	19.6	1.23	15.4	95.9	4.65	2.1	700	26.4	17.7	0.67	0.79	29.2	33.3	1.1
60	3.0	0.8	1.9	600	20.3	1.25	16.0	101.3	4.77	2.4	600	24.6	15.9	0.65	0.93	27.7	26.5	1.3
				700	20.7	1.23	16.5	97.4	4.93	2.2	700	25.1	17.3	0.69	0.96	28.4	26.0	1.4
	4.5	1.6	3.7	600	21.2	1.27	16.9	102.7	4.89	2.4	600	24.8	16.1	0.65	0.88	27.8	28.3	1.2
				700	21.8	1.26	17.5	98.8	5.05	2.3	700	25.3	17.5	0.69	0.91	28.5	27.7	1.3
	6.0	2.6	6.0	600	21.6	1.29	17.2	103.3	4.91	2.5	600	25.1	16.1	0.64	0.85	28.0	29.4	1.1
				700	22.1	1.27	17.8	99.3	5.10	2.3	700	25.6	17.5	0.68	0.89	28.6	28.9	1.3
70	3.0	0.8	1.8	600	22.6	1.30	18.2	104.9	5.11	2.7	600	24.3	15.8	0.65	1.05	27.8	23.1	1.6
				700	23.2	1.27	18.8	100.6	5.34	2.5	700	24.7	17.1	0.69	1.09	28.5	22.7	1.7
	4.5	1.5	3.6	600	23.6	1.32	19.1	106.4	5.23	2.7	600	24.5	15.9	0.65	0.99	27.8	24.6	1.5
				700	24.3	1.30	19.9	102.2	5.46	2.5	700	25.0	17.3	0.69	1.03	28.6	24.2	1.7
	6.0	2.5	5.8	600	24.1	1.34	19.5	107.1	5.27	2.8	600	24.7	15.9	0.64	0.97	28.0	25.6	1.4
				700	24.7	1.31	20.2	102.7	5.51	2.6	700	25.2	17.3	0.69	1.00	28.6	25.2	1.6
80	3.0	0.8	1.8	600	24.6	1.35	20.0	108.0	5.34	3.0	600	23.2	15.4	0.66	1.19	27.3	19.5	2.0
				700	25.3	1.32	20.8	103.5	5.64	2.8	700	23.7	16.7	0.71	1.23	27.9	19.2	2.2
	4.5	1.5	3.4	600	25.7	1.38	21.0	109.6	5.45	3.1	600	23.4	15.6	0.66	1.13	27.3	20.8	1.9
				700	26.5	1.35	21.9	105.1	5.78	2.8	700	24.0	16.9	0.71	1.16	27.9	20.6	2.1
	6.0	2.4	5.6	600	26.1	1.40	21.4	110.3	5.48	3.2	600	23.7	15.6	0.66	1.09	27.4	21.7	1.8
				700	27.0	1.36	22.3	105.7	5.82	2.9	700	24.2	16.9	0.70	1.13	28.0	21.4	2.0
90	3.0	0.7	1.7	600	26.6	1.41	21.8	111.1	5.53	3.3	600	21.5	15.0	0.70	1.35	26.1	15.9	2.5
				700	27.5	1.37	22.9	106.4	5.90	3.1	700	22.0	16.3	0.74	1.39	26.8	15.8	2.7
	4.5	1.4	3.3	600	27.8	1.44	22.9	112.9	5.64	3.4	600	21.7	15.2	0.70	1.28	26.1	17.0	2.4
				700	28.8	1.39	24.0	108.0	6.05	3.2	700	22.2	16.5	0.74	1.32	26.7	16.9	2.6
	6.0	2.3	5.4	600	28.2	1.46	23.2	113.6	5.66	3.5	600	22.0	15.2	0.69	1.24	26.2	17.8	2.2
				700	29.3	1.41	24.5	108.7	6.09	3.3	700	22.4	16.5	0.74	1.28	26.8	17.5	2.4
100	3.0	0.7	1.7	Operation not recommended							Operation not recommended							
	4.5	1.4	3.2								600	20.8	14.8	0.71	1.45	25.7	14.3	2.9
											700	21.2	16.1	0.76	1.49	26.3	14.2	3.2
	6.0	2.2	5.2								600	21.0	14.8	0.70	1.41	25.8	15.0	2.7
											700	21.4	16.1	0.75	1.45	26.4	14.8	3.0
110	3.0	0.7	1.6								Operation not recommended							
	4.5	1.3	3.1								600	18.6	14.3	0.76	1.63	24.2	11.4	3.6
											700	19.0	15.5	0.81	1.68	24.8	11.3	3.9
	6.0	2.2	5.0								600	18.8	14.3	0.76	1.59	24.2	11.9	3.3
											700	19.2	15.5	0.81	1.63	24.8	11.8	3.7
120	3.0	0.7	1.5								Operation not recommended							
	4.5	1.3	2.9								600	17.3	13.8	0.79	1.86	23.7	9.3	4.3
											700	17.6	14.9	0.85	1.91	24.2	9.3	4.7
	6.0	2.1	4.8								600	17.5	13.8	0.79	1.80	23.6	9.7	4.0
											700	17.9	14.9	0.84	1.86	24.2	9.6	4.4

2/13/12

WaterFurnace works continually to improve its products. As a result, the design and specifications of each product at the time of order may be changed without notice. Please contact WaterFurnace at 1-888-929-2837 for latest design and specifications. Purchaser's approval of this data set signifies that the equipment is acceptable under the provisions of the job specification. Statements and other information contained herein are not express warranties and do not form the basis of any bargain between the parties, but are merely WaterFurnace's opinion or commendation of its products. The latest version of this document is available at www.waterfurnace.com.

Performance Data cont.

NS030 - Single Speed with Variable Speed or 5-Speed ECM (900 cfm)

EWT °F	Flow Rate GPM	WPD		HEATING - EAT 70°F							COOLING - EAT 80/67 °F							
		PSI	FT/HD	Airflow CFM	HC MBtu/h	Power kW	HE MBtu/h	LAT °F	COP	HWC Mbtu/h	Airflow CFM	TC Mbtu/h	SC Mbtu/h	S/T Ratio	Power kW	HR Mbtu/h	EER	HWC Mbtu/h
20	4.0	1.4	3.5	Operation not recommended							Operation not recommended							
	6.0	2.8	7.2															
	8.0	4.6	12.1	700	16.9	1.52	11.7	92.4	3.26	2.2								
				900	17.2	1.55	11.9	87.7	3.25	2.0								
30	4.0	1.4	3.4	Operation not recommended							Operation not recommended							
	6.0	2.7	7.0	700	19.4	1.51	14.2	95.7	3.77	2.4	700	26.1	16.7	0.64	0.87	29.1	30.0	---
				900	19.8	1.54	14.6	90.4	3.77	2.2	900	26.8	18.7	0.70	0.94	30.0	28.5	---
	8.0	4.4	11.8	700	19.9	1.53	14.7	96.3	3.82	2.4	700	26.3	16.7	0.63	0.85	29.2	30.8	---
				900	20.2	1.56	14.9	90.8	3.81	2.2	900	27.3	18.7	0.68	0.91	30.4	30.0	---
40	4.0	1.3	3.3	Operation not recommended							Operation not recommended							
	6.0	2.6	6.8	700	22.7	1.56	17.4	100.1	4.27	2.6	700	28.3	18.0	0.64	0.95	31.5	29.7	---
				900	23.3	1.58	17.9	93.9	4.31	2.4	900	29.1	20.2	0.70	1.02	32.6	28.4	---
	8.0	4.3	11.4	700	23.3	1.58	17.9	100.8	4.32	2.7	700	28.5	18.0	0.63	0.93	31.7	30.5	---
				900	23.8	1.60	18.3	94.5	4.36	2.5	900	29.5	20.2	0.68	0.99	32.9	29.7	---
50	4.0	1.3	3.2	700	24.9	1.60	19.4	102.9	4.55	2.8	700	30.2	19.3	0.64	1.10	34.0	27.5	1.4
				900	25.5	1.62	20.0	96.2	4.61	2.6	900	31.1	21.7	0.70	1.17	35.1	26.6	1.5
	6.0	2.5	6.6	700	25.7	1.61	20.2	104.0	4.68	2.9	700	30.3	19.5	0.64	1.06	33.9	28.6	1.3
				900	26.4	1.63	20.8	97.1	4.75	2.7	900	31.2	21.8	0.70	1.13	35.0	27.7	1.4
	8.0	4.2	11.1	700	26.3	1.63	20.7	104.8	4.72	3.0	700	30.6	19.5	0.64	1.04	34.1	29.5	1.2
				900	26.9	1.64	21.3	97.7	4.81	2.8	900	31.6	21.8	0.69	1.10	35.3	28.7	1.4
60	4.0	1.2	3.1	700	27.9	1.67	22.2	107.0	4.90	3.2	700	29.5	18.9	0.64	1.21	33.6	24.4	1.7
				900	28.7	1.67	23.0	99.5	5.02	3.0	900	30.4	21.3	0.70	1.28	34.7	23.7	1.8
	6.0	2.4	6.4	700	28.9	1.69	23.1	108.2	5.01	3.3	700	29.6	19.1	0.65	1.16	33.5	25.4	1.6
				900	29.7	1.69	23.9	100.6	5.16	3.0	900	30.5	21.3	0.70	1.23	34.7	24.7	1.7
	8.0	4.0	10.7	700	29.5	1.71	23.6	109.0	5.05	3.4	700	29.9	19.1	0.64	1.14	33.8	26.2	1.5
				900	30.3	1.70	24.5	101.1	5.21	3.1	900	30.8	21.4	0.69	1.20	34.9	25.6	1.6
70	4.0	1.2	3.0	700	31.1	1.76	25.1	111.1	5.19	3.6	700	29.7	19.2	0.65	1.35	34.3	22.0	2.1
				900	32.0	1.75	26.0	102.9	5.36	3.3	900	30.6	21.6	0.71	1.42	35.4	21.5	2.2
	6.0	2.4	6.2	700	32.1	1.78	26.0	112.5	5.28	3.7	700	29.7	19.3	0.65	1.30	34.2	22.9	2.0
				900	33.1	1.76	27.1	104.1	5.50	3.4	900	30.6	21.6	0.70	1.37	35.3	22.4	2.1
	8.0	3.9	10.4	700	32.7	1.81	26.5	113.2	5.31	3.8	700	30.1	19.3	0.64	1.27	34.4	23.6	1.8
				900	33.7	1.78	27.6	104.6	5.53	3.5	900	31.0	21.7	0.70	1.34	35.5	23.1	2.0
80	4.0	1.2	2.9	700	33.6	1.84	27.3	114.4	5.36	4.0	700	28.4	19.0	0.67	1.51	33.6	18.9	2.6
				900	34.7	1.81	28.5	105.7	5.61	3.7	900	29.3	21.3	0.73	1.58	34.7	18.5	2.8
	6.0	2.3	5.9	700	34.8	1.87	28.4	116.0	5.46	4.1	700	28.6	19.1	0.67	1.45	33.5	19.7	2.5
				900	36.0	1.83	29.7	107.0	5.75	3.8	900	29.4	21.3	0.72	1.52	34.6	19.4	2.7
	8.0	3.8	10.0	700	35.3	1.89	28.9	116.7	5.47	4.3	700	28.8	19.1	0.66	1.42	33.7	20.3	2.3
				900	36.5	1.85	30.2	107.6	5.77	3.9	900	29.7	21.4	0.72	1.49	34.8	19.9	2.5
90	4.0	1.1	2.8	700	36.2	1.94	29.6	117.8	5.47	4.5	700	26.3	18.0	0.68	1.68	32.0	15.6	3.3
				900	37.4	1.89	31.0	108.5	5.80	4.2	900	27.1	20.1	0.74	1.75	33.1	15.5	3.5
	6.0	2.2	5.7	700	37.5	1.97	30.8	119.6	5.59	4.6	700	26.5	18.0	0.68	1.62	32.0	16.4	3.1
				900	38.9	1.92	32.3	110.0	5.93	4.3	900	27.3	20.1	0.74	1.68	33.0	16.2	3.3
	8.0	3.6	9.6	700	38.0	2.00	31.2	120.3	5.58	4.8	700	26.7	18.1	0.68	1.58	32.1	16.9	2.8
				900	39.5	1.94	32.8	110.6	5.95	4.4	900	27.6	20.2	0.73	1.65	33.2	16.7	3.2
100	4.0	1.1	2.7	Operation not recommended							Operation not recommended							
	6.0	2.1	5.5								700	25.3	18.0	0.71	1.83	31.5	13.8	3.8
											900	26.0	20.1	0.77	1.89	32.5	13.8	4.1
	8.0	3.5	9.3								700	25.5	18.1	0.71	1.79	31.6	14.3	3.5
											900	26.3	20.2	0.77	1.85	32.6	14.2	3.9
110	4.0	1.0	2.6								Operation not recommended							
	6.0	2.0	5.3								700	21.5	16.9	0.79	2.04	28.5	10.6	4.6
											900	22.2	18.8	0.85	2.10	29.3	10.6	5.0
	8.0	3.4	8.9								700	21.7	17.0	0.78	1.99	28.5	10.9	4.3
											900	22.4	18.9	0.84	2.05	29.4	10.9	4.7
120	4.0	1.0	2.5								Operation not recommended							
	6.0	2.0	5.1								700	20.8	16.3	0.78	2.30	28.7	9.1	5.5
											900	21.4	18.1	0.85	2.35	29.5	9.1	6.0
	8.0	3.2	8.6								700	20.9	16.4	0.78	2.25	28.6	9.3	5.1
											900	21.7	18.2	0.84	2.30	29.5	9.4	5.7

2/10/12

WaterFurnace works continually to improve its products. As a result, the design and specifications of each product at the time of order may be changed without notice. Please contact WaterFurnace at 1-888-929-2837 for latest design and specifications. Purchaser's approval of this data set signifies that the equipment is acceptable under the provisions of the job specification. Statements and other information contained herein are not express warranties and do not form the basis of any bargain between the parties, but are merely WaterFurnace's opinion or commendation of its products. The latest version of this document is available at www.waterfurnace.com.

Performance Data cont.

NS036 - Single Speed with Variable Speed or 5-Speed ECM (1250 cfm)

EWT °F	Flow Rate GPM	WPD		HEATING - EAT 70°F							COOLING - EAT 80/67 °F							
		PSI	FT/HD	Airflow CFM	HC MBtu/h	Power kW	HE MBtu/h	LAT °F	COP	HWC Mbtu/h	Airflow CFM	TC Mbtu/h	SC Mbtu/h	S/T Ratio	Power kW	HR Mbtu/h	EER	HWC Mbtu/h
20	5.0	1.0	2.4	Operation not recommended							Operation not recommended							
	7.0	2.1	4.9															
	9.0	3.6	8.2	1050	21.0	1.83	14.8	88.5	3.36	2.7								
				1250	21.4	1.87	15.0	85.8	3.35	2.4								
30	5.0	1.0	2.3	Operation not recommended							Operation not recommended							
	7.0	2.1	4.7	1050	23.6	1.84	17.3	90.8	3.76	2.9	1050	30.2	19.5	0.65	1.05	33.8	28.6	---
				1250	24.1	1.88	17.7	87.8	3.76	2.6	1250	31.0	21.9	0.70	1.14	34.9	27.2	---
	9.0	3.5	8.0	1050	24.2	1.86	17.9	91.3	3.82	3.0	1050	30.4	19.4	0.64	1.04	34.0	29.4	---
				1250	24.6	1.89	18.1	88.2	3.81	2.7	1250	31.5	21.8	0.69	1.10	35.3	28.7	---
40	5.0	1.0	2.3	Operation not recommended							Operation not recommended							
	7.0	2.0	4.6	1050	27.4	1.89	20.9	94.2	4.24	3.2	1050	33.1	21.7	0.66	1.15	37.0	28.7	---
				1250	28.0	1.92	21.5	90.8	4.28	3.0	1250	34.0	24.3	0.71	1.24	38.3	27.5	---
	9.0	3.4	7.8	1050	28.0	1.92	21.5	94.7	4.29	3.3	1050	33.4	21.6	0.65	1.13	37.2	29.5	---
				1250	28.6	1.94	22.0	91.2	4.33	3.0	1250	34.5	24.3	0.70	1.20	38.6	28.7	---
50	5.0	1.0	2.2	1050	29.8	1.94	23.2	96.3	4.52	3.5	1050	35.6	23.4	0.66	1.33	40.2	26.8	1.7
				1250	30.5	1.95	23.8	92.6	4.58	3.2	1250	36.7	26.3	0.72	1.41	41.5	26.0	1.8
	7.0	1.9	4.5	1050	30.8	1.94	24.2	97.1	4.64	3.6	1050	35.7	23.6	0.66	1.28	40.1	27.9	1.6
				1250	31.6	1.96	24.9	93.4	4.72	3.3	1250	36.8	26.4	0.72	1.36	41.4	27.0	1.7
	9.0	3.3	7.5	1050	31.5	1.97	24.7	97.7	4.68	3.7	1050	36.1	23.6	0.65	1.25	40.4	28.8	1.4
				1250	32.2	1.98	25.5	93.9	4.78	3.4	1250	37.2	26.4	0.71	1.33	41.8	28.0	1.6
60	5.0	0.9	2.1	1050	33.4	1.99	26.6	99.4	4.92	3.9	1050	35.4	24.0	0.68	1.45	40.3	24.4	2.0
				1250	34.3	1.99	27.5	95.4	5.04	3.6	1250	36.4	26.9	0.74	1.54	41.7	23.7	2.1
	7.0	1.9	4.3	1050	34.5	2.01	27.6	100.4	5.03	4.0	1050	35.4	24.1	0.68	1.40	40.2	25.4	1.9
				1250	35.5	2.01	28.6	96.3	5.18	3.7	1250	36.5	27.0	0.74	1.48	41.6	24.7	2.0
	9.0	3.1	7.3	1050	35.2	2.04	28.2	101.0	5.06	4.2	1050	35.8	24.1	0.67	1.37	40.5	26.2	1.7
				1250	36.2	2.03	29.2	96.8	5.23	3.8	1250	36.9	27.0	0.73	1.45	41.9	25.6	1.9
70	5.0	0.9	2.1	1050	37.1	2.05	30.1	102.8	5.31	4.4	1050	35.9	24.9	0.69	1.61	41.3	22.3	2.5
				1250	38.2	2.04	31.3	98.3	5.48	4.1	1250	36.9	28.0	0.76	1.70	42.7	21.8	2.6
	7.0	1.8	4.2	1050	38.4	2.09	31.3	103.9	5.40	4.5	1050	36.0	25.0	0.70	1.55	41.2	23.2	2.3
				1250	39.6	2.06	32.6	99.3	5.63	4.2	1250	37.0	28.0	0.76	1.63	42.6	22.7	2.5
	9.0	3.0	7.0	1050	39.1	2.11	31.9	104.5	5.43	4.7	1050	36.3	25.0	0.69	1.52	41.5	24.0	2.2
				1250	40.3	2.09	33.2	99.8	5.66	4.3	1250	37.4	28.1	0.75	1.60	42.9	23.4	2.4
80	5.0	0.9	2.0	1050	40.1	2.11	32.9	105.4	5.57	4.9	1050	35.0	24.8	0.71	1.78	41.0	19.6	3.1
				1250	41.4	2.08	34.3	100.7	5.83	4.6	1250	36.0	27.8	0.77	1.87	42.4	19.3	3.3
	7.0	1.7	4.0	1050	41.6	2.15	34.3	106.7	5.68	5.1	1050	35.1	24.9	0.71	1.72	41.0	20.4	2.9
				1250	43.0	2.11	35.8	101.8	5.97	4.7	1250	36.2	27.8	0.77	1.80	42.3	20.2	3.1
	9.0	2.9	6.8	1050	42.2	2.18	34.8	107.2	5.69	5.2	1050	35.5	24.9	0.70	1.68	41.2	21.1	2.7
				1250	43.7	2.13	36.4	102.3	6.00	4.8	1250	36.6	27.9	0.76	1.76	42.6	20.7	3.0
90	5.0	0.8	1.9	1050	43.3	2.18	35.9	108.2	5.82	5.5	1050	32.8	24.2	0.74	1.97	39.5	16.6	3.9
				1250	44.9	2.13	37.6	103.2	6.16	5.1	1250	33.8	27.0	0.80	2.05	40.8	16.5	4.1
	7.0	1.7	3.9	1050	45.0	2.22	37.4	109.6	5.95	5.7	1050	33.0	24.2	0.73	1.90	39.5	17.4	3.6
				1250	46.6	2.17	39.2	104.5	6.31	5.3	1250	34.0	27.0	0.79	1.97	40.7	17.3	3.9
	9.0	2.8	6.6	1050	45.5	2.25	37.9	110.2	5.93	5.9	1050	33.3	24.3	0.73	1.85	39.6	17.9	3.4
				1250	47.3	2.19	39.8	105.0	6.32	5.4	1250	34.3	27.1	0.79	1.94	40.9	17.7	3.7
100	5.0	0.8	1.8	Operation not recommended							Operation not recommended							
	7.0	1.6	3.8								1050	32.1	24.0	0.75	2.12	39.3	15.1	4.5
											1250	33.1	26.8	0.81	2.20	40.6	15.0	4.8
	9.0	2.7	6.3								1050	32.4	24.1	0.75	2.08	39.4	15.6	4.1
											1250	33.4	26.9	0.81	2.15	40.7	15.5	4.6
110	5.0	0.8	1.8								Operation not recommended							
	7.0	1.6	3.6								1050	28.9	22.3	0.77	2.35	36.9	12.3	5.4
											1250	29.8	24.9	0.84	2.42	38.0	12.3	5.9
	9.0	2.6	6.1								1050	29.1	22.4	0.77	2.30	37.0	12.7	5.0
											1250	30.1	25.0	0.83	2.37	38.2	12.7	5.6
120	5.0	0.7	1.7								Operation not recommended							
	7.0	1.5	3.5								1050	27.1	22.0	0.81	2.63	36.1	10.3	6.5
											1250	27.9	24.5	0.88	2.70	37.1	10.4	7.1
	9.0	2.5	5.8								1050	27.3	22.2	0.81	2.57	36.1	10.6	6.1
											1250	28.2	24.6	0.87	2.63	37.2	10.7	6.7

2/10/12

WaterFurnace works continually to improve its products. As a result, the design and specifications of each product at the time of order may be changed without notice. Please contact WaterFurnace at 1-888-929-2837 for latest design and specifications. Purchaser's approval of this data set signifies that the equipment is acceptable under the provisions of the job specification. Statements and other information contained herein are not express warranties and do not form the basis of any bargain between the parties, but are merely WaterFurnace's opinion or commendation of its products. The latest version of this document is available at www.waterfurnace.com.

Performance Data cont.

NS042 - Single Speed with Variable Speed or 5-Speed ECM (1350 cfm)

EWT °F	Flow Rate GPM	WPD		HEATING - EAT 70°F							COOLING - EAT 80/67 °F							
		PSI	FT/HD	Airflow CFM	HC MBtu/h	Power kW	HE MBtu/h	LAT °F	COP	HWC Mbtu/h	Airflow CFM	TC Mbtu/h	SC Mbtu/h	S/T Ratio	Power kW	HR Mbtu/h	EER	HWC Mbtu/h
20	5.0	0.8	1.9	Operation not recommended							Operation not recommended							
	8.0	2.3	5.3															
	11.0	4.4	10.3	1150	24.0	2.12	16.8	89.3	3.32	4.1								
				1350	24.3	2.10	17.1	86.7	3.39	3.7								
30	5.0	0.8	1.8	Operation not recommended							Operation not recommended							
	8.0	2.2	5.1	1150	27.9	2.16	20.6	92.5	3.80	4.3	1150	40.2	24.5	0.61	1.34	44.8	29.9	---
				1350	28.3	2.14	21.0	89.4	3.87	3.9	1350	42.1	27.5	0.65	1.42	46.9	29.6	---
	11.0	4.3	10.0	1150	28.3	2.16	21.0	92.8	3.85	4.4	1150	40.6	24.5	0.60	1.31	45.0	31.1	---
				1350	28.7	2.14	21.4	89.7	3.93	4.0	1350	42.5	27.5	0.65	1.38	47.2	30.8	---
40	5.0	0.8	1.8	Operation not recommended							Operation not recommended							
	8.0	2.1	4.9	1150	31.8	2.24	24.1	95.6	4.15	4.7	1150	41.9	26.2	0.62	1.43	46.8	29.3	---
				1350	32.3	2.21	24.7	92.1	4.28	4.3	1350	43.8	29.4	0.67	1.51	48.9	29.0	---
	11.0	4.2	9.7	1150	32.4	2.25	24.7	96.1	4.21	4.9	1150	42.3	26.2	0.62	1.39	47.1	30.5	---
				1350	32.9	2.21	25.3	92.5	4.35	4.4	1350	44.2	29.4	0.66	1.47	49.2	30.1	---
50	5.0	0.7	1.7	1150	34.2	2.26	26.5	97.5	4.44	5.1	1150	42.6	27.0	0.63	1.62	48.1	26.3	2.5
				1350	34.8	2.21	27.2	93.8	4.61	4.7	1350	44.4	30.4	0.68	1.71	50.2	26.0	2.6
	8.0	2.1	4.8	1150	35.6	2.31	27.7	98.7	4.52	5.3	1150	43.1	27.3	0.63	1.55	48.3	27.9	2.3
				1350	36.2	2.26	28.5	94.8	4.71	4.8	1350	44.8	30.7	0.68	1.63	50.4	27.6	2.5
	11.0	4.1	9.4	1150	36.3	2.32	28.4	99.3	4.58	5.4	1150	43.5	27.3	0.63	1.50	48.6	29.0	2.1
				1350	37.0	2.27	29.3	95.4	4.78	5.0	1350	45.3	30.7	0.68	1.58	50.7	28.7	2.4
60	5.0	0.7	1.7	1150	37.5	2.32	29.6	100.2	4.73	5.7	1150	42.5	27.7	0.65	1.78	48.5	23.8	3.0
				1350	38.3	2.26	30.5	96.2	4.96	5.3	1350	44.1	31.1	0.71	1.87	50.5	23.6	3.2
	8.0	2.0	4.6	1150	39.2	2.39	31.0	101.6	4.80	5.9	1150	43.0	28.0	0.65	1.70	48.8	25.4	2.8
				1350	40.0	2.32	32.1	97.4	5.06	5.4	1350	44.7	31.4	0.70	1.78	50.8	25.1	3.0
	11.0	3.9	9.1	1150	40.1	2.41	31.9	102.3	4.87	6.1	1150	43.4	28.0	0.64	1.65	49.1	26.4	2.6
				1350	41.0	2.34	33.0	98.1	5.14	5.6	1350	45.1	31.4	0.70	1.73	51.0	26.1	2.9
70	5.0	0.7	1.6	1150	40.7	2.40	32.5	102.8	4.97	6.4	1150	42.6	28.6	0.67	1.97	49.4	21.6	3.8
				1350	41.6	2.32	33.7	98.6	5.26	6.0	1350	44.2	32.1	0.73	2.06	51.2	21.4	4.0
	8.0	1.9	4.5	1150	42.7	2.48	34.2	104.4	5.04	6.6	1150	43.3	28.9	0.67	1.87	49.7	23.1	3.5
				1350	43.7	2.39	35.5	100.0	5.36	6.1	1350	44.9	32.5	0.72	1.96	51.5	22.9	3.8
	11.0	3.8	8.8	1150	43.8	2.51	35.2	105.2	5.11	6.8	1150	43.7	28.9	0.66	1.82	49.9	24.1	3.3
				1350	44.9	2.42	36.6	100.8	5.45	6.3	1350	45.3	32.5	0.72	1.90	51.8	23.8	3.6
80	5.0	0.7	1.6	1150	43.7	2.44	35.4	105.2	5.26	7.2	1150	41.0	27.9	0.68	2.19	48.5	18.7	4.8
				1350	44.9	2.34	36.9	100.8	5.63	6.7	1350	42.4	31.4	0.74	2.29	50.2	18.5	5.1
	8.0	1.9	4.3	1150	46.0	2.54	37.4	107.0	5.32	7.5	1150	41.8	28.2	0.68	2.08	48.9	20.1	4.5
				1350	47.3	2.42	39.0	102.4	5.72	6.9	1350	43.2	31.7	0.73	2.17	50.6	19.9	4.8
	11.0	3.7	8.5	1150	47.3	2.57	38.6	108.1	5.39	7.7	1150	42.2	28.2	0.67	2.02	49.1	20.9	4.1
				1350	48.7	2.46	40.3	103.4	5.82	7.1	1350	43.6	31.7	0.73	2.11	50.8	20.7	4.6
90	5.0	0.7	1.5	1150	46.7	2.48	38.2	107.6	5.51	8.1	1150	38.9	27.1	0.70	2.45	47.2	15.9	6.0
				1350	48.0	2.37	40.0	102.9	5.95	7.5	1350	40.1	30.5	0.76	2.55	48.8	15.7	6.4
	8.0	1.8	4.2	1150	49.2	2.60	40.4	109.6	5.55	8.4	1150	39.7	27.4	0.69	2.31	47.6	17.1	5.6
				1350	50.8	2.47	42.4	104.8	6.03	7.8	1350	40.9	30.8	0.75	2.41	49.1	17.0	6.1
	11.0	3.5	8.2	1150	50.8	2.64	41.8	110.9	5.63	8.6	1150	40.1	27.4	0.68	2.25	47.7	17.8	5.2
				1350	52.4	2.51	43.9	106.0	6.14	8.0	1350	41.3	30.8	0.75	2.34	49.3	17.6	5.8
100	5.0	0.6	1.5	Operation not recommended							Operation not recommended							
	8.0	1.7	4.0								1150	38.2	26.9	0.70	2.58	47.0	14.8	6.9
											1350	39.2	30.2	0.77	2.68	48.4	14.6	7.5
	11.0	3.4	7.9								1150	38.5	26.9	0.70	2.50	47.1	15.4	6.4
											1350	39.6	30.2	0.76	2.60	48.5	15.2	7.2
110	5.0	0.6	1.4								Operation not recommended							
	8.0	1.7	3.9								1150	34.8	24.9	0.71	2.88	44.6	12.1	8.5
											1350	35.7	27.9	0.78	2.98	45.9	12.0	9.2
	11.0	3.3	7.6								1150	35.1	24.9	0.71	2.79	44.7	12.6	7.9
											1350	36.0	27.9	0.77	2.89	45.9	12.5	8.8
120	5.0	0.6	1.3								Operation not recommended							
	8.0	1.6	3.7								1150	32.8	24.6	0.75	3.20	43.7	10.2	10.3
											1350	33.5	27.6	0.82	3.31	44.8	10.1	11.1
	11.0	3.2	7.3								1150	33.1	24.6	0.74	3.11	43.7	10.7	9.5
											1350	33.9	27.6	0.81	3.21	44.8	10.6	10.6

2/10/12

WaterFurnace works continually to improve its products. As a result, the design and specifications of each product at the time of order may be changed without notice. Please contact WaterFurnace at 1-888-929-2837 for latest design and specifications. Purchaser's approval of this data set signifies that the equipment is acceptable under the provisions of the job specification. Statements and other information contained herein are not express warranties and do not form the basis of any bargain between the parties, but are merely WaterFurnace's opinion or commendation of its products. The latest version of this document is available at www.waterfurnace.com.

Performance Data cont.

NS048 - Single Speed with Variable Speed or 5-Speed ECM (1500 cfm)

EWT °F	Flow Rate GPM	WPD		HEATING - EAT 70°F							COOLING - EAT 80/67 °F							
		PSI	FT/HD	Airflow CFM	HC MBtu/h	Power kW	HE MBtu/h	LAT °F	COP	HWC Mbtu/h	Airflow CFM	TC Mbtu/h	SC Mbtu/h	S/T Ratio	Power kW	HR Mbtu/h	EER	HWC Mbtu/h
20	6.0	1.1	2.6	Operation not recommended							Operation not recommended							
	9.0	2.3	5.4															
	12.0	4.0	9.2	1300	31.6	2.84	21.9	92.5	3.26	5.3								
				1500	32.0	2.82	22.4	89.7	3.33	4.8								
30	6.0	1.1	2.5	Operation not recommended							Operation not recommended							
	9.0	2.3	5.3	1300	36.3	2.92	26.3	95.8	3.64	5.6	1300	48.2	29.6	0.61	1.58	53.6	30.5	---
				1500	36.7	2.90	26.8	92.6	3.71	5.2	1500	50.5	33.3	0.66	1.67	56.2	30.2	---
	12.0	3.9	9.0	1300	36.8	2.93	26.8	96.2	3.68	5.8	1300	48.7	29.6	0.61	1.53	53.9	31.8	---
				1500	37.2	2.90	27.3	93.0	3.76	5.3	1500	51.0	33.3	0.65	1.62	56.5	31.4	---
40	6.0	1.1	2.5	Operation not recommended							Operation not recommended							
	9.0	2.2	5.1	1300	41.7	3.05	31.3	99.7	4.00	6.2	1300	50.1	31.2	0.62	1.74	56.0	28.9	---
				1500	42.2	3.00	32.0	96.1	4.13	5.7	1500	52.3	35.1	0.67	1.83	58.6	28.6	---
	12.0	3.8	8.7	1300	42.4	3.06	31.9	100.2	4.06	6.4	1300	50.6	31.2	0.62	1.68	56.4	30.0	---
				1500	43.0	3.01	32.7	96.5	4.19	5.8	1500	52.9	35.1	0.66	1.78	58.9	29.7	---
50	6.0	1.0	2.4	1300	44.7	3.09	34.1	101.8	4.24	6.7	1300	51.2	32.5	0.63	2.02	58.1	25.3	2.9
				1500	45.4	3.02	35.1	98.0	4.40	6.2	1500	53.3	36.5	0.68	2.13	60.6	25.1	3.1
	9.0	2.1	4.9	1300	46.5	3.16	35.7	103.1	4.32	6.9	1300	51.7	32.8	0.63	1.93	58.3	26.8	2.7
				1500	47.3	3.08	36.7	99.2	4.49	6.4	1500	53.9	36.8	0.68	2.03	60.8	26.6	2.9
	12.0	3.7	8.4	1300	47.4	3.18	36.6	103.8	4.37	7.2	1300	52.2	32.8	0.63	1.87	58.6	27.9	2.5
				1500	48.2	3.10	37.7	99.8	4.56	6.5	1500	54.4	36.8	0.68	1.97	61.1	27.6	2.8
60	6.0	1.0	2.3	1300	49.1	3.18	38.2	105.0	4.52	7.6	1300	50.0	32.1	0.64	2.24	57.6	22.3	3.5
				1500	50.0	3.10	39.5	100.9	4.74	7.0	1500	51.9	36.0	0.69	2.35	59.9	22.1	3.7
	9.0	2.1	4.8	1300	51.3	3.28	40.1	106.5	4.59	7.8	1300	50.6	32.4	0.64	2.13	57.9	23.7	3.3
				1500	52.3	3.18	41.5	102.3	4.83	7.2	1500	52.6	36.4	0.69	2.24	60.2	23.5	3.6
	12.0	3.5	8.2	1300	52.5	3.31	41.2	107.4	4.65	8.0	1300	51.1	32.4	0.63	2.07	58.2	24.7	3.0
				1500	53.6	3.20	42.7	103.1	4.91	7.4	1500	53.1	36.4	0.69	2.17	60.5	24.4	3.4
70	6.0	1.0	2.2	1300	53.6	3.29	42.4	108.2	4.78	8.5	1300	49.7	32.4	0.65	2.51	58.3	19.8	4.4
				1500	54.7	3.17	43.9	103.8	5.05	7.9	1500	51.5	36.5	0.71	2.63	60.5	19.6	4.7
	9.0	2.0	4.6	1300	56.1	3.40	44.5	110.0	4.84	8.8	1300	50.5	32.8	0.65	2.38	58.6	21.2	4.1
				1500	57.4	3.27	46.3	105.5	5.14	8.1	1500	52.3	36.8	0.70	2.50	60.9	21.0	4.5
	12.0	3.4	7.9	1300	57.6	3.44	45.8	111.0	4.91	9.0	1300	51.0	32.8	0.64	2.31	58.9	22.0	3.8
				1500	59.0	3.31	47.7	106.4	5.22	8.3	1500	52.9	36.8	0.70	2.42	61.1	21.8	4.2
80	6.0	0.9	2.1	1300	57.1	3.37	45.6	110.7	4.97	9.6	1300	47.7	31.7	0.67	2.81	57.3	17.0	5.6
				1500	58.6	3.23	47.5	106.2	5.32	8.8	1500	49.3	35.6	0.72	2.94	59.3	16.8	5.9
	9.0	1.9	4.5	1300	60.1	3.50	48.1	112.8	5.03	9.8	1300	48.5	32.0	0.66	2.66	57.6	18.2	5.2
				1500	61.7	3.35	50.3	108.1	5.40	9.1	1500	50.2	36.0	0.72	2.78	59.7	18.0	5.6
	12.0	3.3	7.6	1300	61.8	3.55	49.7	114.0	5.10	10.1	1300	49.0	32.0	0.65	2.59	57.8	19.0	4.8
				1500	63.5	3.39	51.9	109.2	5.49	9.4	1500	50.7	36.0	0.71	2.70	59.9	18.8	5.4
90	6.0	0.9	2.1	1300	60.7	3.45	48.9	113.2	5.16	10.7	1300	44.5	30.3	0.68	3.14	55.2	14.2	7.0
				1500	62.4	3.29	51.2	108.5	5.56	9.9	1500	45.9	34.0	0.74	3.27	57.0	14.0	7.4
	9.0	1.9	4.3	1300	64.1	3.61	51.7	115.6	5.20	11.1	1300	45.4	30.6	0.67	2.97	55.5	15.3	6.5
				1500	66.0	3.43	54.3	110.7	5.64	10.2	1500	46.8	34.3	0.73	3.09	57.4	15.1	7.1
	12.0	3.2	7.4	1300	66.1	3.67	53.5	117.0	5.27	11.4	1300	45.9	30.6	0.67	2.88	55.7	15.9	6.1
				1500	68.1	3.48	56.2	112.0	5.74	10.6	1500	47.3	34.3	0.73	3.00	57.5	15.7	6.7
100	6.0	0.9	2.0	Operation not recommended							Operation not recommended							
	9.0	1.8	4.2								1300	43.9	30.1	0.69	3.33	55.2	13.2	8.1
											1500	45.1	33.9	0.75	3.46	56.9	13.0	8.8
	12.0	3.1	7.1								1300	44.3	30.1	0.68	3.23	55.3	13.7	7.5
											1500	45.6	33.9	0.74	3.36	57.0	13.6	8.4
110	6.0	0.8	1.9								Operation not recommended							
	9.0	1.7	4.0								1300	39.7	28.0	0.71	3.71	52.3	10.7	9.9
											1500	40.7	31.4	0.77	3.84	53.8	10.6	10.8
	12.0	3.0	6.8								1300	40.1	28.0	0.70	3.60	52.3	11.1	9.2
											1500	41.1	31.4	0.77	3.73	53.8	11.0	10.2
120	6.0	0.8	1.8								Operation not recommended							
	9.0	1.7	3.8								1300	37.6	27.4	0.73	4.13	51.7	9.1	12.0
											1500	38.4	30.8	0.80	4.27	53.0	9.0	13.0
	12.0	2.8	6.6								1300	37.9	27.4	0.72	4.01	51.6	9.5	11.1
											1500	38.8	30.8	0.79	4.15	53.0	9.4	12.4

2/10/12

WaterFurnace works continually to improve its products. As a result, the design and specifications of each product at the time of order may be changed without notice. Please contact WaterFurnace at 1-888-929-2837 for latest design and specifications. Purchaser's approval of this data set signifies that the equipment is acceptable under the provisions of the job specification. Statements and other information contained herein are not express warranties and do not form the basis of any bargain between the parties, but are merely WaterFurnace's opinion or commendation of its products. The latest version of this document is available at www.waterfurnace.com.

Performance Data cont.

NS060 - Single Speed with Variable Speed or 5-Speed ECM (2000 cfm)

EWT °F	Flow Rate GPM	WPD		HEATING - EAT 70°F							COOLING - EAT 80/67 °F							
		PSI	FT/HD	Airflow CFM	HC MBtu/h	Power kW	HE MBtu/h	LAT °F	COP	HWC Mbtu/h	Airflow CFM	TC Mbtu/h	SC Mbtu/h	S/T Ratio	Power kW	HR Mbtu/h	EER	HWC Mbtu/h
20	9.0	2.5	5.7	Operation not recommended							Operation not recommended							
	12.0	4.0	9.2															
	15.0	5.9	13.5	1500	38.6	3.70	26.0	93.8	3.06	6.5								
				2000	39.4	3.77	26.5	88.2	3.06	5.8								
30	9.0	2.4	5.5	Operation not recommended							Operation not recommended							
	12.0	3.9	8.9	1500	43.5	3.70	30.9	96.9	3.45	6.8	1500	73.6	46.9	0.64	2.16	81.0	34.1	---
				2000	44.4	3.77	31.5	90.5	3.45	6.2	2000	71.2	48.3	0.68	2.61	80.2	27.3	---
	15.0	5.7	13.1	1500	44.9	3.80	31.9	97.7	3.46	7.0	1500	74.3	47.0	0.63	2.16	81.7	34.4	---
				2000	45.8	3.86	32.6	91.2	3.47	6.4	2000	72.4	47.8	0.66	2.44	80.8	29.6	---
40	9.0	2.3	5.3	Operation not recommended							Operation not recommended							
	12.0	3.7	8.7	1500	51.3	3.86	38.2	101.7	3.90	7.5	1500	71.9	47.4	0.66	2.40	80.1	30.0	---
				2000	52.5	3.94	39.1	94.3	3.91	6.9	2000	71.3	49.5	0.69	2.81	80.9	25.4	---
	15.0	5.5	12.7	1500	52.8	3.94	39.3	102.6	3.92	7.8	1500	72.6	47.6	0.66	2.39	80.8	30.4	---
				2000	53.8	4.01	40.1	94.9	3.93	7.1	2000	72.1	49.3	0.68	2.65	81.2	27.2	---
50	9.0	2.2	5.2	1500	57.3	4.00	43.6	105.4	4.19	8.1	1500	72.2	48.4	0.67	2.81	81.8	25.7	3.9
				2000	57.9	4.05	44.1	96.8	4.19	7.5	2000	72.4	50.2	0.69	3.15	83.1	23.0	4.1
	12.0	3.6	8.4	1500	57.9	3.99	44.3	105.7	4.25	8.4	1500	72.3	48.5	0.67	2.71	81.6	26.7	3.6
				2000	59.4	4.09	45.5	97.5	4.26	7.7	2000	72.4	50.7	0.70	3.09	82.9	23.5	3.9
	15.0	5.3	12.3	1500	59.4	4.08	45.5	106.6	4.27	8.6	1500	73.0	48.7	0.67	2.70	82.2	27.1	3.4
				2000	60.5	4.13	46.4	98.0	4.29	7.9	2000	73.1	50.7	0.69	2.94	83.2	24.9	3.7
60	9.0	2.2	5.0	1500	63.3	4.14	49.2	109.1	4.48	9.1	1500	68.5	46.2	0.68	3.04	78.9	22.5	4.7
				2000	64.4	4.17	50.1	99.8	4.52	8.4	2000	70.0	49.1	0.70	3.33	81.4	21.0	5.0
	12.0	3.5	8.1	1500	64.9	4.16	50.7	110.0	4.57	9.4	1500	68.7	46.4	0.68	2.93	78.7	23.4	4.4
				2000	65.8	4.21	51.4	100.5	4.57	8.7	2000	70.4	49.3	0.70	3.24	81.4	21.7	4.8
	15.0	5.2	11.9	1500	66.3	4.23	51.9	110.9	4.59	9.7	1500	69.4	46.7	0.67	2.91	79.3	23.9	4.1
				2000	67.7	4.28	53.1	101.3	4.63	8.9	2000	70.8	49.6	0.70	3.12	81.4	22.7	4.6
70	9.0	2.1	4.9	1500	69.5	4.29	54.9	112.9	4.75	10.3	1500	65.9	45.2	0.69	3.42	77.5	19.3	5.9
				2000	71.0	4.31	56.3	102.9	4.83	9.5	2000	68.8	49.1	0.71	3.68	81.3	18.7	6.3
	12.0	3.4	7.9	1500	72.0	4.33	57.2	114.5	4.87	10.6	1500	66.2	45.5	0.69	3.29	77.4	20.1	5.5
				2000	72.4	4.35	57.5	103.5	4.87	9.8	2000	69.5	49.1	0.71	3.54	81.6	19.6	6.0
	15.0	5.0	11.6	1500	73.4	4.40	58.4	115.3	4.89	10.9	1500	66.8	45.8	0.69	3.25	77.9	20.6	5.1
				2000	75.1	4.44	59.9	104.7	4.95	10.0	2000	69.5	49.6	0.71	3.44	81.2	20.2	5.7
80	9.0	2.0	4.7	1500	74.3	4.41	59.3	115.9	4.94	11.5	1500	64.1	44.6	0.70	3.81	77.0	16.8	7.5
				2000	75.7	4.41	60.6	105.0	5.03	10.7	2000	65.7	47.7	0.73	4.06	79.6	16.2	8.0
	12.0	3.3	7.6	1500	77.7	4.48	62.4	117.9	5.08	11.9	1500	64.4	45.0	0.70	3.66	76.9	17.6	7.0
				2000	78.3	4.44	63.2	106.3	5.18	11.0	2000	66.4	47.7	0.72	3.87	79.6	17.2	7.6
	15.0	4.8	11.2	1500	78.9	4.54	63.4	118.7	5.10	12.2	1500	65.1	45.4	0.70	3.60	77.4	18.1	6.5
				2000	80.5	4.57	64.9	107.3	5.16	11.3	2000	66.7	48.2	0.72	3.76	79.6	17.8	7.2
90	9.0	2.0	4.5	1500	79.3	4.54	63.8	119.0	5.12	13.0	1500	60.9	43.2	0.71	4.20	75.2	14.5	9.4
				2000	80.6	4.53	65.1	107.3	5.21	12.0	2000	61.3	45.5	0.74	4.45	76.5	13.8	10.0
	12.0	3.2	7.3	1500	83.5	4.65	67.7	121.6	5.27	13.4	1500	61.3	43.7	0.71	4.03	75.1	15.2	8.8
				2000	84.5	4.53	69.1	109.1	5.47	12.4	2000	61.9	45.5	0.73	4.20	76.3	14.7	9.5
	15.0	4.7	10.8	1500	84.7	4.69	68.6	122.3	5.29	13.8	1500	61.9	44.1	0.71	3.96	75.4	15.7	8.2
				2000	86.2	4.72	70.0	109.9	5.35	12.8	2000	62.6	46.0	0.73	4.08	76.5	15.3	9.1
100	9.0	1.9	4.4	Operation not recommended							Operation not recommended							
	12.0	3.1	7.1								1500	58.8	42.9	0.73	4.59	74.5	12.8	10.9
											2000	59.4	44.7	0.75	4.70	75.5	12.6	11.8
	15.0	4.5	10.4								1500	59.4	43.4	0.73	4.49	74.8	13.2	10.1
											2000	60.0	45.2	0.75	4.58	75.7	13.1	11.2
110	9.0	1.8	4.2								Operation not recommended							
	12.0	2.9	6.8								1500	53.8	39.9	0.74	5.08	71.2	10.6	13.4
											2000	54.4	41.5	0.76	5.14	71.9	10.6	14.5
	15.0	4.3	10.0								1500	54.4	40.4	0.74	4.96	71.3	11.0	12.4
											2000	54.9	42.1	0.77	5.01	72.0	11.0	13.8
120	9.0	1.7	4.0								Operation not recommended							
	12.0	2.8	6.5								1500	51.8	40.5	0.78	5.78	71.5	9.0	16.1
											2000	50.8	41.2	0.81	5.80	70.6	8.8	17.5
	15.0	4.2	9.6								1500	52.3	41.1	0.78	5.62	71.5	9.3	15.0
											2000	51.7	41.7	0.81	5.63	70.9	9.2	16.7

2/10/12

WaterFurnace works continually to improve its products. As a result, the design and specifications of each product at the time of order may be changed without notice. Please contact WaterFurnace at 1-888-929-2837 for latest design and specifications. Purchaser's approval of this data set signifies that the equipment is acceptable under the provisions of the job specification. Statements and other information contained herein are not express warranties and do not form the basis of any bargain between the parties, but are merely WaterFurnace's opinion or commendation of its products. The latest version of this document is available at www.waterfurnace.com.

Performance Data cont.

NS070 - Single Speed with Variable Speed or 5-Speed ECM (2200 cfm)

EWT °F	Flow Rate GPM	WPD		HEATING - EAT 70°F							COOLING - EAT 80/67 °F							
		PSI	FT/HD	Airflow CFM	HC MBtu/h	Power kW	HE MBtu/h	LAT °F	COP	HWC Mbtu/h	Airflow CFM	TC Mbtu/h	SC Mbtu/h	S/T Ratio	Power kW	HR Mbtu/h	EER	HWC Mbtu/h
20	12.0	3.0	7.0	Operation not recommended							Operation not recommended							
	15.0	4.4	10.2															
	18.0	6.0	13.9	1700	45.6	4.45	30.4	94.8	3.00	7.7								
				2200	46.6	4.54	31.2	89.6	3.01	6.9								
30	12.0	3.0	6.8	Operation not recommended							Operation not recommended							
	15.0	4.3	9.9	1700	52.5	4.55	37.0	98.6	3.38	8.1	1700	69.3	43.4	0.63	2.39	77.5	29.0	---
				2200	53.8	4.65	37.9	92.6	3.39	7.4	2200	73.9	49.6	0.67	2.79	83.4	26.5	---
	18.0	5.8	13.5	1700	52.7	4.57	37.1	98.7	3.38	8.4	1700	69.7	42.9	0.62	2.38	77.8	29.3	---
				2200	54.0	4.66	38.1	92.7	3.39	7.6	2200	74.3	49.0	0.66	2.78	83.8	26.7	---
40	12.0	2.9	6.6	Operation not recommended							Operation not recommended							
	15.0	4.1	9.6	1700	61.3	4.75	45.1	103.4	3.78	8.9	1700	71.7	46.1	0.64	2.63	80.6	27.3	---
				2200	62.8	4.80	46.4	96.4	3.83	8.2	2200	76.1	52.7	0.69	3.03	86.4	25.1	---
	18.0	5.7	13.1	1700	61.7	4.77	45.4	103.6	3.79	9.2	1700	72.2	45.9	0.64	2.61	81.1	27.7	---
				2200	63.2	4.82	46.7	96.6	3.84	8.4	2200	76.6	52.5	0.68	3.01	86.9	25.5	---
50	12.0	2.8	6.4	1700	67.6	4.89	50.9	106.8	4.05	9.7	1700	75.1	48.4	0.64	3.01	85.4	24.9	4.3
				2200	69.2	4.91	52.4	99.1	4.13	8.9	2200	79.4	55.4	0.70	3.43	91.1	23.2	4.5
	15.0	4.0	9.3	1700	68.9	4.94	52.1	107.5	4.09	10.0	1700	75.5	48.7	0.64	2.92	85.5	25.8	4.0
				2200	70.6	4.95	53.7	99.7	4.18	9.2	2200	79.8	55.7	0.70	3.33	91.2	24.0	4.3
	18.0	5.5	12.7	1700	69.5	4.97	52.6	107.9	4.10	10.3	1700	76.3	48.9	0.64	2.89	86.1	26.4	3.7
				2200	71.3	4.98	54.3	100.0	4.20	9.4	2200	80.6	55.9	0.69	3.29	91.9	24.5	4.1
60	12.0	2.7	6.2	1700	74.9	5.09	57.5	110.8	4.31	10.8	1700	72.3	46.9	0.65	3.31	83.5	21.8	5.2
				2200	76.8	5.06	59.5	102.3	4.45	10.0	2200	76.1	53.6	0.70	3.72	88.8	20.4	5.5
	15.0	3.9	9.0	1700	77.1	5.16	59.5	112.0	4.38	11.2	1700	72.6	47.0	0.65	3.22	83.5	22.6	4.8
				2200	79.1	5.12	61.6	103.3	4.53	10.3	2200	76.4	53.8	0.70	3.62	88.8	21.1	5.2
	18.0	5.3	12.3	1700	78.0	5.20	60.2	112.5	4.39	11.5	1700	73.5	47.6	0.65	3.17	84.3	23.2	4.5
				2200	80.0	5.15	62.4	103.7	4.55	10.6	2200	77.4	54.5	0.70	3.57	89.5	21.7	5.0
70	12.0	2.6	6.0	1700	82.6	5.30	64.5	115.0	4.57	12.2	1700	72.0	47.5	0.66	3.69	84.6	19.5	6.5
				2200	84.8	5.22	66.9	105.7	4.76	11.3	2200	75.5	54.4	0.72	4.11	89.5	18.4	6.9
	15.0	3.8	8.7	1700	85.6	5.40	67.2	116.6	4.65	12.6	1700	72.3	47.6	0.66	3.59	84.5	20.2	6.1
				2200	87.9	5.30	69.8	107.0	4.86	11.6	2200	75.8	54.5	0.72	3.99	89.4	19.0	6.6
	18.0	5.1	11.9	1700	86.8	5.44	68.2	117.3	4.67	13.0	1700	73.4	48.7	0.66	3.53	85.4	20.8	5.6
				2200	89.1	5.34	70.9	107.5	4.89	11.9	2200	76.9	55.7	0.72	3.93	90.3	19.6	6.3
80	12.0	2.5	5.8	1700	88.2	5.50	69.4	118.0	4.70	13.7	1700	69.1	45.5	0.66	4.12	83.1	16.8	8.2
				2200	90.7	5.37	72.3	108.2	4.95	12.7	2200	72.1	52.1	0.72	4.53	87.6	15.9	8.7
	15.0	3.6	8.4	1700	92.2	5.62	73.0	120.2	4.81	14.1	1700	69.3	45.5	0.66	4.00	82.9	17.3	7.7
				2200	94.8	5.47	76.2	109.9	5.08	13.1	2200	72.4	52.1	0.72	4.40	87.4	16.4	8.3
	18.0	5.0	11.5	1700	93.6	5.68	74.3	121.0	4.83	14.6	1700	70.5	46.9	0.67	3.92	83.9	18.0	7.1
				2200	96.5	5.52	77.6	110.6	5.12	13.5	2200	73.6	53.7	0.73	4.31	88.3	17.1	7.9
90	12.0	2.4	5.6	1700	94.2	5.72	74.7	121.3	4.83	15.4	1700	63.4	42.2	0.67	4.57	79.0	13.9	10.3
				2200	97.0	5.53	78.1	110.8	5.14	14.3	2200	66.0	48.4	0.73	4.98	83.0	13.3	10.9
	15.0	3.5	8.1	1700	99.2	5.87	79.2	124.1	4.96	15.9	1700	63.6	42.1	0.66	4.45	78.8	14.3	9.6
				2200	102.2	5.66	82.9	113.0	5.29	14.7	2200	66.2	48.3	0.73	4.84	82.7	13.7	10.4
	18.0	4.8	11.1	1700	100.9	5.93	80.7	125.0	4.99	16.4	1700	64.9	43.8	0.68	4.35	79.7	14.9	8.9
				2200	104.2	5.71	84.8	113.9	5.35	15.2	2200	67.5	50.3	0.74	4.73	83.6	14.3	9.9
100	12.0	2.3	5.4	Operation not recommended							Operation not recommended							
	15.0	3.4	7.8								1700	61.7	41.6	0.67	5.01	78.9	12.3	12.0
											2200	64.0	47.7	0.75	5.39	82.4	11.9	13.0
	18.0	4.6	10.7								1700	63.1	43.7	0.69	4.88	79.8	12.9	11.1
											2200	65.4	50.1	0.77	5.24	83.3	12.5	12.3
110	12.0	2.2	5.2								Operation not recommended							
	15.0	3.3	7.5								1700	54.8	37.0	0.67	5.58	73.8	9.8	14.6
											2200	56.5	42.4	0.75	5.94	76.8	9.5	15.9
	18.0	4.4	10.2								1700	56.1	39.1	0.70	5.41	74.6	10.4	13.6
											2200	57.9	44.9	0.78	5.76	77.6	10.0	15.1
120	12.0	2.2	5.0								Operation not recommended							
	15.0	3.1	7.2								1700	52.0	37.4	0.72	6.27	73.4	8.3	17.7
											2200	53.4	43.0	0.80	6.60	76.0	8.1	19.2
	18.0	4.3	9.8								1700	53.4	40.0	0.75	6.06	74.1	8.8	16.4
											2200	54.9	45.9	0.84	6.38	76.7	8.6	18.2

2/10/12

WaterFurnace works continually to improve its products. As a result, the design and specifications of each product at the time of order may be changed without notice. Please contact WaterFurnace at 1-888-929-2837 for latest design and specifications. Purchaser's approval of this data set signifies that the equipment is acceptable under the provisions of the job specification. Statements and other information contained herein are not express warranties and do not form the basis of any bargain between the parties, but are merely WaterFurnace's opinion or commendation of its products. The latest version of this document is available at www.waterfurnace.com.

Performance Data cont.

ND026 - Dual Capacity with Variable Speed or 5-Speed ECM Low Speed (700 cfm)

EWT °F	Flow Rate GPM	WPD		HEATING - EAT 70°F							COOLING - EAT 80/67 °F							
		PSI	FT/HD	Airflow CFM	HC MBtu/h	Power kW	HE MBtu/h	LAT °F	COP	HWC Mbtu/h	Airflow CFM	TC Mbtu/h	SC Mbtu/h	S/T Ratio	Power kW	HR Mbtu/h	EER	HWC Mbtu/h
20	3.0	0.8	1.9	Operation not recommended							Operation not recommended							
	5.0	2.0	4.7															
	7.0	3.7	8.7	500	11.9	1.06	8.3	92.0	3.28	1.8								
				700	12.4	1.09	8.7	86.4	3.33	1.6								
30	3.0	0.8	1.8	Operation not recommended							Operation not recommended							
	5.0	2.0	4.5	500	13.1	1.06	9.5	94.3	3.61	1.8	500	22.5	14.1	0.63	0.52	24.3	43.3	-
				700	13.7	1.09	9.9	88.1	3.66	1.6	700	22.9	15.4	0.67	0.55	24.8	41.8	-
	7.0	3.6	8.4	500	13.9	1.09	10.2	95.8	3.75	1.8	500	22.6	14.1	0.62	0.50	24.4	44.9	-
				700	14.5	1.12	10.7	89.2	3.80	1.6	700	23.2	15.4	0.66	0.53	25.0	43.8	-
40	3.0	0.8	1.8	Operation not recommended							Operation not recommended							
	5.0	1.9	4.4	500	15.3	1.06	11.7	98.3	4.21	1.8	500	23.3	14.7	0.63	0.58	25.3	40.1	-
				700	15.8	1.08	12.1	90.9	4.28	1.7	700	23.7	16.0	0.67	0.61	25.8	38.9	-
	7.0	3.5	8.2	500	16.1	1.09	12.4	99.8	4.33	1.9	500	23.5	14.7	0.62	0.56	25.4	41.6	-
				700	16.7	1.11	12.9	92.0	4.40	1.7	700	24.0	16.0	0.67	0.59	26.0	40.7	-
50	3.0	0.7	1.7	500	16.8	1.06	13.2	101.2	4.65	1.9	500	23.5	14.5	0.62	0.66	25.8	35.6	0.7
				700	17.4	1.08	13.7	93.0	4.73	1.7	700	24.2	16.1	0.67	0.67	26.5	35.9	0.8
	5.0	1.8	4.3	500	17.4	1.06	13.8	102.3	4.81	1.9	500	23.7	14.6	0.62	0.64	25.9	36.9	0.7
				700	18.0	1.08	14.3	93.8	4.90	1.8	700	24.4	16.2	0.66	0.66	26.6	37.2	0.7
	7.0	3.4	7.9	500	18.3	1.09	14.6	103.8	4.92	2.0	500	24.1	15.0	0.62	0.64	26.3	37.8	0.6
				700	18.8	1.10	15.0	94.9	5.01	1.8	700	24.8	16.6	0.67	0.65	27.0	38.2	0.7
60	3.0	0.7	1.7	500	19.4	1.08	15.7	105.9	5.28	2.1	500	23.1	14.5	0.63	0.75	25.7	30.7	1.0
				700	19.9	1.09	16.2	96.3	5.37	1.9	700	23.7	16.0	0.68	0.77	26.4	31.0	1.0
	5.0	1.8	4.1	500	20.2	1.08	16.5	107.4	5.50	2.1	500	23.3	14.6	0.63	0.73	25.8	31.8	0.9
				700	20.7	1.08	17.0	97.3	5.60	2.0	700	24.0	16.1	0.67	0.75	26.5	32.1	1.0
	7.0	3.3	7.6	500	20.9	1.10	17.1	108.7	5.56	2.2	500	23.7	15.0	0.63	0.73	26.2	32.6	0.8
				700	21.4	1.11	17.6	98.2	5.66	2.0	700	24.4	16.6	0.68	0.74	26.9	32.9	0.9
70	3.0	0.7	1.6	500	21.9	1.09	18.2	110.6	5.88	2.3	500	22.7	14.5	0.64	0.84	25.6	26.9	1.3
				700	22.4	1.09	18.6	99.6	5.99	2.1	700	23.3	16.0	0.69	0.86	26.2	27.1	1.4
	5.0	1.7	4.0	500	22.9	1.09	19.2	112.4	6.16	2.4	500	22.9	14.5	0.64	0.82	25.7	27.8	1.3
				700	23.3	1.09	19.6	100.8	6.28	2.2	700	23.5	16.1	0.68	0.84	26.4	28.1	1.4
	7.0	3.2	7.4	500	23.5	1.11	19.7	113.5	6.19	2.4	500	23.3	14.9	0.64	0.81	26.0	28.6	1.2
				700	23.9	1.11	20.1	101.6	6.31	2.2	700	23.9	16.5	0.69	0.83	26.7	28.8	1.3
80	3.0	0.7	1.6	500	24.4	1.12	20.5	115.1	6.35	2.6	500	21.1	13.8	0.65	0.97	24.4	21.8	1.8
				700	24.7	1.12	20.9	102.7	6.47	2.4	700	21.7	15.3	0.70	0.99	25.1	21.9	1.9
	5.0	1.7	3.9	500	25.5	1.12	21.7	117.3	6.70	2.6	500	21.3	13.9	0.65	0.95	24.5	22.5	1.7
				700	25.8	1.11	22.0	104.2	6.83	2.4	700	21.9	15.4	0.70	0.96	25.2	22.7	1.9
	7.0	3.1	7.1	500	25.9	1.14	22.0	117.9	6.65	2.7	500	21.6	14.2	0.66	0.94	24.8	23.1	1.6
				700	26.2	1.13	22.3	104.6	6.78	2.5	700	22.3	15.8	0.71	0.96	25.5	23.3	1.8
90	3.0	0.7	1.5	500	26.8	1.16	22.8	119.6	6.79	2.9	500	19.5	13.1	0.67	1.10	23.3	17.8	2.4
				700	27.0	1.14	23.1	105.7	6.93	2.7	700	20.1	14.5	0.72	1.12	23.9	18.0	2.6
	5.0	1.6	3.7	500	28.1	1.15	24.2	122.1	7.20	3.0	500	19.7	13.2	0.67	1.07	23.4	18.4	2.3
				700	28.3	1.13	24.5	107.5	7.35	2.8	700	20.3	14.6	0.72	1.09	24.0	18.6	2.5
	7.0	3.0	6.9	500	28.3	1.17	24.3	122.4	7.09	3.1	500	20.0	13.6	0.68	1.06	23.7	18.9	2.1
				700	28.4	1.15	24.5	107.6	7.24	2.8	700	20.6	15.0	0.73	1.08	24.3	19.1	2.4
100	3.0	0.6	1.5	Operation not recommended							Operation not recommended							
	5.0	1.6	3.6								500	18.2	12.6	0.69	1.23	22.4	14.9	3.0
											700	18.7	14.0	0.75	1.25	23.0	15.0	3.2
	7.0	2.9	6.6								500	18.5	13.0	0.70	1.22	22.7	15.2	2.8
											700	19.1	14.4	0.75	1.24	23.3	15.4	3.1
110	3.0	0.6	1.4								Operation not recommended							
	5.0	1.5	3.4								500	16.8	12.1	0.72	1.39	21.5	12.1	3.8
											700	17.2	13.4	0.78	1.41	22.0	12.2	4.1
	7.0	2.8	6.4								500	17.0	12.4	0.73	1.37	21.7	12.4	3.5
											700	17.5	13.7	0.78	1.40	22.3	12.5	3.9
120	3.0	0.6	1.3								Operation not recommended							
	5.0	1.4	3.3								500	16.2	12.4	0.77	1.59	21.6	10.2	4.7
											700	16.5	13.5	0.82	1.63	22.1	10.1	5.1
	7.0	2.7	6.1								500	16.4	12.4	0.76	1.54	21.6	10.6	4.3
											700	16.7	13.5	0.81	1.59	22.1	10.5	4.8

Performance capacities shown in thousands of Btuh 9/16/14

WaterFurnace works continually to improve its products. As a result, the design and specifications of each product at the time of order may be changed without notice. Please contact WaterFurnace at 1-888-929-2837 for latest design and specifications. Purchaser's approval of this data set signifies that the equipment is acceptable under the provisions of the job specification. Statements and other information contained herein are not express warranties and do not form the basis of any bargain between the parties, but are merely WaterFurnace's opinion or commendation of its products. The latest version of this document is available at www.waterfurnace.com.

Performance Data cont.

ND026 - Dual Capacity with Variable Speed or 5-Speed ECM High Speed (900 cfm)

EWT °F	Flow Rate GPM	WPD		HEATING - EAT 70°F							COOLING - EAT 80/67 °F							
		PSI	FT/HD	Airflow CFM	HC MBtu/h	Power kW	HE MBtu/h	LAT °F	COP	HWC Mbtu/h	Airflow CFM	TC Mbtu/h	SC Mbtu/h	S/T Ratio	Power kW	HR Mbtu/h	EER	HWC Mbtu/h
20	4.0	1.4	3.2	Operation not recommended							Operation not recommended							
	6.0	2.9	6.6															
	8.0	4.8	11.1	700	16.5	1.42	11.6	91.8	3.40	2.1								
				900	17.0	1.46	12.0	87.5	3.41	2.0								
30	4.0	1.4	3.2	Operation not recommended							Operation not recommended							
	6.0	2.8	6.4	700	18.9	1.45	13.9	95.0	3.82	2.3	700	29.8	18.6	0.62	0.93	33.0	32.0	---
				900	19.4	1.50	14.3	90.0	3.81	2.1	900	30.3	20.3	0.67	0.98	33.6	30.8	---
	8.0	4.7	10.8	700	19.2	1.47	14.2	95.4	3.84	2.3	700	30.0	18.6	0.62	0.90	33.1	33.1	---
				900	19.8	1.51	14.7	90.4	3.85	2.2	900	30.7	20.3	0.66	0.95	33.9	32.3	---
40	4.0	1.3	3.1	Operation not recommended							Operation not recommended							
	6.0	2.7	6.2	700	21.5	1.50	16.4	98.5	4.21	2.5	700	30.1	19.1	0.63	1.02	33.6	29.4	-
				900	22.2	1.53	17.0	92.8	4.25	2.3	900	30.7	20.8	0.68	1.07	34.3	28.5	-
	8.0	4.5	10.4	700	22.0	1.51	16.8	99.1	4.25	2.6	700	30.3	19.1	0.63	0.99	33.7	30.5	-
				900	22.7	1.55	17.4	93.3	4.30	2.4	900	31.0	20.8	0.67	1.04	34.5	29.8	-
50	4.0	1.3	3.0	700	23.3	1.51	18.2	100.9	4.53	2.7	700	28.8	17.8	0.62	1.17	32.8	24.6	1.3
				900	24.0	1.53	18.8	94.7	4.60	2.5	900	30.3	19.7	0.65	1.23	34.5	24.6	1.4
	6.0	2.6	6.0	700	24.2	1.55	18.9	102.0	4.59	2.8	700	29.4	18.0	0.61	1.10	33.2	26.7	1.3
				900	25.0	1.57	19.6	95.7	4.67	2.6	900	31.0	20.0	0.64	1.16	34.9	26.8	1.4
	8.0	4.4	10.1	700	24.7	1.56	19.4	102.7	4.65	2.9	700	29.7	19.2	0.65	1.08	33.4	27.6	1.2
				900	25.5	1.58	20.1	96.2	4.73	2.7	900	31.3	21.3	0.68	1.13	35.2	27.7	1.3
60	4.0	1.2	2.9	700	26.0	1.58	20.6	104.4	4.82	3.1	700	28.5	17.9	0.63	1.28	32.9	22.3	1.6
				900	26.8	1.59	21.4	97.6	4.94	2.9	900	29.9	19.9	0.67	1.34	34.4	22.3	1.7
	6.0	2.5	5.8	700	27.2	1.63	21.6	105.9	4.90	3.2	700	29.2	18.1	0.62	1.22	33.3	24.0	1.5
				900	28.1	1.64	22.5	98.9	5.02	2.9	900	30.5	20.1	0.66	1.27	34.9	24.1	1.6
	8.0	4.2	9.8	700	27.8	1.64	22.2	106.8	4.96	3.3	700	29.4	19.1	0.65	1.19	33.5	24.8	1.4
				900	28.8	1.65	23.1	99.6	5.11	3.0	900	30.9	21.2	0.68	1.24	35.1	24.9	1.6
70	4.0	1.2	2.8	700	28.7	1.65	23.1	108.0	5.09	3.5	700	28.2	18.0	0.64	1.39	32.9	20.3	2.0
				900	29.7	1.65	24.0	100.5	5.27	3.2	900	29.4	20.1	0.68	1.44	34.3	20.4	2.1
	6.0	2.4	5.6	700	30.2	1.71	24.3	109.9	5.18	3.6	700	28.9	18.2	0.63	1.33	33.4	21.7	1.9
				900	31.2	1.71	25.3	102.1	5.35	3.3	900	30.1	20.2	0.67	1.38	34.8	21.9	2.0
	8.0	4.1	9.5	700	30.9	1.73	25.1	110.9	5.25	3.7	700	29.2	19.0	0.65	1.30	33.6	22.5	1.7
				900	32.0	1.72	26.1	102.9	5.45	3.4	900	30.5	21.0	0.69	1.35	35.1	22.6	1.9
80	4.0	1.2	2.7	700	31.2	1.75	25.3	111.3	5.23	3.9	700	27.0	17.8	0.66	1.54	32.2	17.5	2.5
				900	32.3	1.74	26.4	103.3	5.46	3.6	900	28.0	19.8	0.71	1.59	33.5	17.7	2.7
	6.0	2.4	5.4	700	33.0	1.82	26.8	113.7	5.32	4.0	700	27.7	18.0	0.65	1.49	32.8	18.6	2.3
				900	34.2	1.80	28.0	105.1	5.56	3.7	900	28.8	20.0	0.69	1.53	34.0	18.8	2.5
	8.0	4.0	9.2	700	34.0	1.84	27.7	115.0	5.41	4.1	700	28.0	18.5	0.66	1.46	33.0	19.2	2.2
				900	35.2	1.82	29.0	106.2	5.68	3.8	900	29.2	20.5	0.70	1.50	34.3	19.4	2.4
90	4.0	1.1	2.6	700	33.8	1.85	27.5	114.7	5.36	4.3	700	25.7	17.6	0.68	1.69	31.5	15.2	3.1
				900	35.0	1.82	28.8	106.0	5.63	4.0	900	26.7	19.5	0.73	1.73	32.6	15.4	3.3
	6.0	2.3	5.2	700	35.9	1.93	29.3	117.5	5.45	4.5	700	26.5	17.8	0.67	1.64	32.1	16.1	2.9
				900	37.2	1.90	30.7	108.2	5.74	4.1	900	27.5	19.8	0.72	1.68	33.2	16.3	3.2
	8.0	3.8	8.8	700	37.0	1.96	30.3	119.0	5.54	4.6	700	26.8	18.0	0.67	1.62	32.3	16.6	2.7
				900	38.3	1.91	31.8	109.4	5.88	4.3	900	27.8	19.9	0.72	1.65	33.4	16.8	3.0
100	4.0	1.1	2.5	Operation not recommended							Operation not recommended							
	6.0	2.2	5.1								700	24.9	17.3	0.69	1.85	31.2	13.5	3.6
											900	25.7	19.2	0.74	1.88	32.1	13.7	3.9
	8.0	3.7	8.5								700	25.2	17.2	0.68	1.82	31.4	13.9	3.3
											900	26.0	19.1	0.73	1.85	32.3	14.1	3.7
110	4.0	1.0	2.4								Operation not recommended							
	6.0	2.1	4.9								700	23.3	16.7	0.72	2.05	30.3	11.4	4.4
											900	24.0	18.6	0.78	2.07	31.0	11.6	4.7
	8.0	3.5	8.2								700	23.6	16.5	0.70	2.02	30.4	11.7	4.1
											900	24.2	18.2	0.75	2.04	31.2	11.9	4.5
120	4.0	1.0	2.3								Operation not recommended							
	6.0	2.0	4.7								700	21.6	16.1	0.74	2.28	29.4	9.5	5.3
											900	22.0	17.5	0.79	2.34	30.0	9.4	5.7
	8.0	3.4	7.9								700	21.8	16.1	0.74	2.21	29.4	9.9	4.9
											900	22.3	17.5	0.78	2.28	30.1	9.8	5.4

9/16/14

WaterFurnace works continually to improve its products. As a result, the design and specifications of each product at the time of order may be changed without notice. Please contact WaterFurnace at 1-888-929-2837 for latest design and specifications. Purchaser's approval of this data set signifies that the equipment is acceptable under the provisions of the job specification. Statements and other information contained herein are not express warranties and do not form the basis of any bargain between the parties, but are merely WaterFurnace's opinion or commendation of its products. The latest version of this document is available at www.waterfurnace.com.

Performance Data cont.

ND038 - Dual Capacity with Variable Speed or 5-Speed ECM Low Speed (1050 cfm)

EWT °F	Flow Rate GPM	WPD		HEATING - EAT 70°F							COOLING - EAT 80/67 °F							
		PSI	FT/HD	Airflow CFM	HC MBtu/h	Power kW	HE MBtu/h	LAT °F	COP	HWC Mbtu/h	Airflow CFM	TC Mbtu/h	SC Mbtu/h	S/T Ratio	Power kW	HR Mbtu/h	EER	HWC Mbtu/h
20	4.0	0.9	2.1	Operation not recommended							Operation not recommended							
	6.0	1.7	4.0															
	8.0	2.9	6.7	900	17.6	1.63	12.1	88.1	3.17	2.5								
				1050	18.4	1.67	12.7	86.2	3.22	2.3								
30	4.0	0.9	2.0	Operation not recommended							Operation not recommended							
	6.0	1.7	3.9	900	19.2	1.58	13.8	89.8	3.57	2.4	900	29.5	19.1	0.65	0.74	32.0	40.1	---
				1050	20.0	1.62	14.5	87.7	3.62	2.2	1050	30.0	20.9	0.70	0.78	32.6	38.7	---
	8.0	2.8	6.5	900	20.5	1.62	14.9	91.0	3.71	2.5	900	29.7	19.1	0.64	0.71	32.1	41.5	---
				1050	21.3	1.66	15.6	88.8	3.76	2.3	1050	30.4	20.9	0.69	0.75	33.0	40.5	---
40	4.0	0.8	1.9	Operation not recommended							Operation not recommended							
	6.0	1.6	3.8	900	22.5	1.60	17.0	93.1	4.11	2.5	900	30.8	20.6	0.67	0.81	33.5	37.8	-
				1050	23.3	1.63	17.7	90.5	4.17	2.3	1050	31.3	22.5	0.72	0.85	34.3	36.8	-
	8.0	2.7	6.3	900	23.7	1.64	18.1	94.4	4.23	2.6	900	31.0	20.6	0.66	0.79	33.7	39.3	-
				1050	24.5	1.67	18.8	91.6	4.29	2.4	1050	31.7	22.5	0.71	0.83	34.5	38.4	-
50	4.0	0.8	1.9	900	24.8	1.63	19.3	95.5	4.47	2.6	900	31.3	21.1	0.67	0.91	34.4	34.2	1.0
				1050	25.6	1.65	20.0	92.6	4.55	2.4	1050	32.2	23.4	0.73	0.93	35.4	34.5	1.1
	6.0	1.6	3.7	900	25.7	1.63	20.1	96.4	4.62	2.7	900	31.6	21.2	0.67	0.89	34.6	35.5	0.9
				1050	26.5	1.65	20.8	93.3	4.70	2.5	1050	32.5	23.5	0.72	0.91	35.6	35.8	1.0
	8.0	2.6	6.1	900	26.9	1.67	21.2	97.7	4.73	2.8	900	32.1	21.8	0.68	0.88	35.1	36.4	0.9
				1050	27.7	1.69	21.9	94.4	4.81	2.5	1050	33.0	24.1	0.73	0.90	36.1	36.7	1.0
60	4.0	0.8	1.8	900	28.1	1.67	22.4	98.9	4.94	2.9	900	30.5	20.8	0.68	1.04	34.0	29.4	1.3
				1050	28.8	1.68	23.1	95.4	5.03	2.6	1050	31.3	23.1	0.74	1.06	35.0	29.7	1.4
	6.0	1.5	3.6	900	29.3	1.67	23.6	100.1	5.15	3.0	900	30.8	21.0	0.68	1.01	34.2	30.5	1.3
				1050	29.9	1.68	24.2	96.4	5.24	2.7	1050	31.6	23.2	0.73	1.03	35.1	30.7	1.4
	8.0	2.5	5.9	900	30.3	1.70	24.5	101.2	5.21	3.0	900	31.3	21.5	0.69	1.00	34.7	31.3	1.2
				1050	31.0	1.71	25.1	97.3	5.30	2.8	1050	32.2	23.8	0.74	1.02	35.6	31.5	1.3
70	4.0	0.8	1.8	900	31.4	1.71	25.6	102.3	5.39	3.2	900	29.7	20.6	0.69	1.16	33.6	25.6	1.9
				1050	32.0	1.71	26.2	98.3	5.49	2.9	1050	30.5	22.8	0.75	1.18	34.5	25.8	2.0
	6.0	1.5	3.5	900	32.8	1.70	27.0	103.7	5.64	3.3	900	30.0	20.7	0.69	1.13	33.8	26.6	1.7
				1050	33.4	1.70	27.6	99.4	5.75	3.0	1050	30.8	22.9	0.74	1.15	34.7	26.8	1.9
	8.0	2.5	5.7	900	33.6	1.74	27.7	104.6	5.67	3.4	900	30.5	21.2	0.70	1.12	34.3	27.2	1.6
				1050	34.2	1.74	28.3	100.2	5.78	3.1	1050	31.3	23.5	0.75	1.14	35.2	27.5	1.8
80	4.0	0.7	1.7	900	35.0	1.77	29.0	106.0	5.80	3.6	900	28.1	19.8	0.70	1.33	32.6	21.1	2.5
				1050	35.5	1.76	29.5	101.3	5.91	3.3	1050	28.9	21.9	0.76	1.36	33.5	21.3	2.7
	6.0	1.4	3.3	900	36.7	1.76	30.7	107.7	6.12	3.7	900	28.3	19.9	0.70	1.30	32.8	21.9	2.4
				1050	37.1	1.74	31.1	102.7	6.24	3.4	1050	29.1	22.0	0.76	1.32	33.6	22.0	2.6
	8.0	2.4	5.5	900	37.2	1.79	31.1	108.3	6.08	3.8	900	28.8	20.4	0.71	1.29	33.2	22.4	2.2
				1050	37.6	1.78	31.5	103.1	6.20	3.5	1050	29.6	22.6	0.76	1.31	34.1	22.6	2.5
90	4.0	0.7	1.6	900	38.6	1.83	32.3	109.7	6.19	4.0	900	26.5	18.9	0.71	1.50	31.6	17.6	3.4
				1050	38.9	1.81	32.7	104.3	6.31	3.7	1050	27.2	20.9	0.77	1.53	32.4	17.7	3.6
	6.0	1.4	3.2	900	40.5	1.81	34.4	111.7	6.56	4.2	900	26.7	19.0	0.71	1.46	31.7	18.2	3.2
				1050	40.8	1.79	34.7	106.0	6.70	3.8	1050	27.4	21.1	0.77	1.49	32.5	18.4	3.4
	8.0	2.3	5.3	900	40.7	1.85	34.4	111.9	6.46	4.3	900	27.1	19.5	0.72	1.45	32.1	18.7	2.9
				1050	40.9	1.82	34.7	106.1	6.59	4.0	1050	27.9	21.6	0.77	1.48	32.9	18.9	3.3
100	4.0	0.7	1.6	Operation not recommended							Operation not recommended							
	6.0	1.3	3.1								900	24.9	18.6	0.75	1.68	30.6	14.8	4.1
											1050	25.6	20.6	0.80	1.72	31.4	14.9	4.5
	8.0	2.2	5.1								900	25.3	19.1	0.75	1.67	31.0	15.2	3.8
											1050	26.0	21.1	0.81	1.70	31.8	15.3	4.2
110	4.0	0.7	1.5								Operation not recommended							
	6.0	1.3	3.0								900	23.1	18.1	0.79	1.90	29.6	12.1	5.2
											1050	23.7	20.1	0.85	1.94	30.3	12.2	5.7
	8.0	2.1	4.9								900	23.4	18.6	0.79	1.88	29.9	12.4	4.8
											1050	24.1	20.6	0.85	1.92	30.7	12.6	5.4
120	4.0	0.6	1.5								Operation not recommended							
	6.0	1.2	2.9								900	22.2	18.8	0.85	2.18	29.7	10.2	6.5
											1050	22.6	20.4	0.90	2.24	30.3	10.1	7.0
	8.0	2.0	4.7								900	22.4	18.8	0.84	2.11	29.6	10.6	6.0
											1050	22.9	20.4	0.89	2.18	30.3	10.5	6.7

9/16/14

WaterFurnace works continually to improve its products. As a result, the design and specifications of each product at the time of order may be changed without notice. Please contact WaterFurnace at 1-888-929-2837 for latest design and specifications. Purchaser's approval of this data set signifies that the equipment is acceptable under the provisions of the job specification. Statements and other information contained herein are not express warranties and do not form the basis of any bargain between the parties, but are merely WaterFurnace's opinion or commendation of its products. The latest version of this document is available at www.waterfurnace.com.

Performance Data cont.

ND038 - Dual Capacity with Variable Speed or 5-Speed ECM High Speed (1250 cfm)

EWT °F	Flow Rate GPM	WPD		HEATING - EAT 70°F							COOLING - EAT 80/67 °F							
		PSI	FT/HD	Airflow CFM	HC MBtu/h	Power kW	HE MBtu/h	LAT °F	COP	HWC Mbtu/h	Airflow CFM	TC Mbtu/h	SC Mbtu/h	S/T Ratio	Power kW	HR Mbtu/h	EER	HWC Mbtu/h
20	5.0	1.3	3.0	Operation not recommended							Operation not recommended							
	7.0	2.3	5.2															
	9.0	3.5	8.1	1050	25.2	2.21	17.7	92.2	3.34	2.9								
				1250	26.0	2.28	18.2	89.3	3.34	2.6								
30	5.0	1.2	2.9	Operation not recommended							Operation not recommended							
	7.0	2.2	5.1	1050	28.8	2.24	21.1	95.4	3.77	3.1	1050	39.3	25.2	0.64	1.43	44.2	27.4	-
				1250	29.6	2.31	21.7	91.9	3.76	2.8	1250	40.0	27.5	0.69	1.51	45.1	26.5	-
	9.0	3.4	7.9	1050	29.2	2.26	21.5	95.8	3.79	3.2	1050	39.5	25.2	0.64	1.39	44.3	28.4	-
				1250	30.2	2.33	22.3	92.4	3.80	2.9	1250	40.5	27.5	0.68	1.46	45.5	27.7	-
40	5.0	1.2	2.8	Operation not recommended							Operation not recommended							
	7.0	2.1	4.9	1050	32.7	2.32	24.8	98.8	4.12	3.4	1050	40.6	26.4	0.65	1.60	46.0	25.4	-
				1250	33.7	2.37	25.6	95.0	4.16	3.1	1250	41.3	28.8	0.70	1.67	47.0	24.7	-
	9.0	3.3	7.6	1050	33.3	2.35	25.3	99.4	4.16	3.5	1050	40.9	26.4	0.65	1.55	46.2	26.4	-
				1250	34.4	2.40	26.2	95.5	4.21	3.2	1250	41.8	28.8	0.69	1.62	47.3	25.8	-
50	5.0	1.2	2.7	1050	35.3	2.36	27.3	101.1	4.39	3.7	1050	39.7	25.1	0.63	1.84	46.0	21.5	1.9
				1250	36.4	2.39	28.2	96.9	4.46	3.4	1250	41.8	27.9	0.67	1.94	48.4	21.5	2.0
	7.0	2.1	4.8	1050	36.6	2.41	28.4	102.3	4.45	3.8	1050	40.5	25.4	0.63	1.74	46.5	23.3	1.8
				1250	37.8	2.44	29.4	98.0	4.53	3.5	1250	42.6	28.2	0.66	1.82	48.8	23.4	1.9
	9.0	3.2	7.4	1050	37.4	2.43	29.1	103.0	4.51	3.9	1050	40.9	27.1	0.66	1.69	46.7	24.1	1.7
				1250	38.6	2.47	30.2	98.6	4.59	3.6	1250	43.1	30.1	0.70	1.78	49.2	24.2	1.8
60	5.0	1.1	2.6	1050	38.7	2.47	30.3	104.1	4.60	4.2	1050	39.4	25.8	0.66	2.00	46.2	19.7	2.3
				1250	40.0	2.48	31.5	99.6	4.72	3.8	1250	41.3	28.7	0.70	2.09	48.4	19.8	2.4
	7.0	2.0	4.6	1050	40.5	2.54	31.8	105.7	4.68	4.3	1050	40.4	26.1	0.65	1.90	46.8	21.3	2.2
				1250	41.8	2.55	33.1	100.9	4.80	4.0	1250	42.3	29.0	0.69	1.98	49.0	21.4	2.3
	9.0	3.1	7.2	1050	41.4	2.56	32.7	106.5	4.74	4.4	1050	40.7	27.5	0.68	1.85	47.1	22.0	2.0
				1250	42.8	2.57	34.0	101.7	4.88	4.1	1250	42.8	30.6	0.71	1.94	49.4	22.1	2.2
70	5.0	1.1	2.5	1050	42.1	2.57	33.4	107.2	4.80	4.7	1050	39.2	26.6	0.68	2.15	46.5	18.2	2.9
				1250	43.6	2.57	34.8	102.3	4.96	4.3	1250	40.9	29.6	0.72	2.23	48.5	18.3	3.0
	7.0	1.9	4.5	1050	44.3	2.66	35.2	109.1	4.88	4.8	1050	40.2	26.9	0.67	2.06	47.2	19.5	2.7
				1250	45.8	2.66	36.7	103.9	5.04	4.4	1250	41.9	29.8	0.71	2.13	49.2	19.7	2.9
	9.0	3.0	6.9	1050	45.5	2.69	36.3	110.1	4.95	5.0	1050	40.6	28.0	0.69	2.01	47.4	20.2	2.5
				1250	47.0	2.68	37.9	104.8	5.14	4.6	1250	42.4	31.0	0.73	2.09	49.5	20.3	2.8
80	5.0	1.1	2.5	1050	45.4	2.72	36.2	110.1	4.89	5.2	1050	37.5	26.1	0.70	2.34	45.4	16.0	3.6
				1250	47.0	2.70	37.8	104.8	5.10	4.8	1250	39.0	29.0	0.74	2.41	47.2	16.1	3.8
	7.0	1.9	4.3	1050	48.1	2.83	38.4	112.4	4.98	5.4	1050	38.5	26.4	0.69	2.26	46.2	17.0	3.3
				1250	49.7	2.80	40.1	106.8	5.20	5.0	1250	40.0	29.2	0.73	2.33	48.0	17.2	3.6
	9.0	2.9	6.7	1050	49.5	2.87	39.7	113.6	5.05	5.6	1050	38.9	27.0	0.69	2.21	46.4	17.6	3.1
				1250	51.2	2.83	41.5	107.9	5.31	5.1	1250	40.5	30.0	0.74	2.28	48.3	17.8	3.4
90	5.0	1.0	2.4	1050	48.8	2.87	39.0	113.0	4.97	5.9	1050	35.8	25.5	0.71	2.53	44.4	14.1	4.4
				1250	50.5	2.83	40.8	107.4	5.23	5.4	1250	37.0	28.4	0.77	2.59	45.9	14.3	4.7
	7.0	1.8	4.2	1050	51.8	3.00	41.6	115.7	5.06	6.0	1050	36.8	25.9	0.70	2.46	45.2	15.0	4.1
				1250	53.7	2.95	43.6	109.8	5.33	5.6	1250	38.2	28.7	0.75	2.52	46.8	15.1	4.5
	9.0	2.8	6.5	1050	53.5	3.05	43.1	117.1	5.14	6.2	1050	37.2	26.1	0.70	2.42	45.5	15.4	3.9
				1250	55.3	2.97	45.2	111.0	5.46	5.8	1250	38.6	28.9	0.75	2.47	47.0	15.6	4.3
100	5.0	1.0	2.3	Operation not recommended							Operation not recommended							
	7.0	1.7	4.0								1050	34.6	25.0	0.72	2.73	43.9	12.7	5.1
											1250	35.7	27.7	0.78	2.77	45.2	12.9	5.5
	9.0	2.7	6.2								1050	35.0	24.9	0.71	2.68	44.1	13.1	4.8
											1250	36.1	27.6	0.76	2.72	45.4	13.3	5.3
110	5.0	1.0	2.2								Operation not recommended							
	7.0	1.7	3.9								1050	32.4	24.1	0.74	2.99	42.6	10.8	6.2
											1250	33.3	26.7	0.80	3.01	43.5	11.0	6.8
	9.0	2.6	6.0								1050	32.7	23.7	0.73	2.94	42.7	11.1	5.8
											1250	33.6	26.2	0.78	2.97	43.7	11.3	6.4
120	5.0	0.9	2.1								Operation not recommended							
	7.0	1.6	3.7								1050	30.6	23.3	0.76	3.31	41.9	9.2	7.5
											1250	31.1	25.3	0.81	3.39	42.7	9.2	8.1
	9.0	2.5	5.8								1050	30.8	23.3	0.76	3.20	41.8	9.6	7.0
											1250	31.5	25.3	0.80	3.30	42.8	9.5	7.7

9/16/14

WaterFurnace works continually to improve its products. As a result, the design and specifications of each product at the time of order may be changed without notice. Please contact WaterFurnace at 1-888-929-2837 for latest design and specifications. Purchaser's approval of this data set signifies that the equipment is acceptable under the provisions of the job specification. Statements and other information contained herein are not express warranties and do not form the basis of any bargain between the parties, but are merely WaterFurnace's opinion or commendation of its products. The latest version of this document is available at www.waterfurnace.com.

Performance Data cont.

ND049 - Dual Capacity with Variable Speed or 5-Speed ECM Low Speed (1350 cfm)

EWT °F	Flow Rate GPM	WPD		HEATING - EAT 70°F							COOLING - EAT 80/67 °F							
		PSI	FT/HD	Airflow CFM	HC MBtu/h	Power kW	HE MBtu/h	LAT °F	COP	HWC Mbtu/h	Airflow CFM	TC Mbtu/h	SC Mbtu/h	S/T Ratio	Power kW	HR Mbtu/h	EER	HWC Mbtu/h
20	5.0	0.9	2.2	Operation not recommended							Operation not recommended							
	8.0	2.0	4.6															
	11.0	3.4	7.8	1150	23.5	2.20	15.9	88.9	3.12	4.2								
				1350	24.3	2.24	16.7	86.7	3.19	3.8								
30	5.0	0.9	2.1	Operation not recommended							Operation not recommended							
	8.0	1.9	4.4	1150	26.5	2.20	19.0	91.3	3.52	4.3	1150	37.5	21.5	0.57	1.10	41.2	34.1	---
				1350	27.3	2.22	19.7	88.7	3.61	3.9	1350	38.1	23.5	0.62	1.16	42.0	32.9	---
	11.0	3.3	7.6	1150	27.1	2.22	19.6	91.8	3.59	4.4	1150	37.7	21.5	0.57	1.07	41.3	35.3	---
				1350	28.1	2.25	20.4	89.3	3.66	4.0	1350	38.6	23.5	0.61	1.12	42.4	34.5	---
40	5.0	0.9	2.0	Operation not recommended							Operation not recommended							
	8.0	1.9	4.3	1150	29.9	2.23	22.3	94.1	3.93	4.5	1150	39.5	23.4	0.59	1.21	43.6	32.6	-
				1350	31.0	2.23	23.3	91.2	4.06	4.2	1350	40.2	25.6	0.64	1.27	44.6	31.7	-
	11.0	3.2	7.4	1150	30.9	2.25	23.2	94.9	4.03	4.7	1150	39.8	23.4	0.59	1.18	43.8	33.8	-
				1350	32.0	2.26	24.2	91.9	4.14	4.2	1350	40.7	25.6	0.63	1.23	44.9	33.1	-
50	5.0	0.9	2.0	1150	31.0	2.19	23.5	94.9	4.14	4.8	1150	40.4	23.3	0.58	1.56	45.7	25.9	1.6
				1350	32.0	2.19	24.5	91.9	4.27	4.4	1350	41.7	27.5	0.66	1.63	47.2	25.6	1.7
	8.0	1.8	4.2	1150	33.4	2.26	25.7	96.9	4.32	4.9	1150	41.3	23.5	0.57	1.35	45.9	30.5	1.5
				1350	34.7	2.25	27.0	93.8	4.51	4.5	1350	42.5	27.6	0.65	1.42	47.4	30.0	1.6
	11.0	3.1	7.2	1150	34.7	2.28	26.9	97.9	4.46	5.1	1150	41.5	23.5	0.56	1.27	45.9	32.6	1.4
				1350	35.8	2.28	28.0	94.6	4.60	4.6	1350	42.8	27.6	0.65	1.34	47.4	31.9	1.5
60	5.0	0.8	1.9	1150	33.7	2.23	26.1	97.1	4.42	5.2	1150	39.5	23.3	0.59	1.69	45.3	23.4	2.3
				1350	34.9	2.22	27.3	93.9	4.61	4.8	1350	40.7	27.5	0.67	1.76	46.8	23.1	2.4
	8.0	1.8	4.0	1150	36.5	2.29	28.6	99.3	4.67	5.4	1150	40.2	23.5	0.59	1.50	45.3	26.8	2.1
				1350	37.9	2.26	30.2	96.0	4.91	5.0	1350	41.4	27.7	0.67	1.57	46.7	26.4	2.3
	11.0	3.0	6.9	1150	38.0	2.31	30.1	100.6	4.83	5.5	1150	40.6	23.6	0.58	1.42	45.5	28.6	1.9
				1350	39.4	2.28	31.6	97.0	5.06	5.1	1350	41.9	27.7	0.66	1.49	46.9	28.2	2.2
70	5.0	0.8	1.8	1150	36.4	2.27	28.7	99.3	4.71	5.8	1150	38.6	23.3	0.60	1.81	44.8	21.3	3.2
				1350	37.9	2.24	30.2	96.0	4.95	5.4	1350	39.8	27.4	0.69	1.90	46.3	21.0	3.4
	8.0	1.7	3.9	1150	39.5	2.31	31.7	101.8	5.02	6.0	1150	39.0	23.6	0.60	1.64	44.6	23.8	3.0
				1350	41.1	2.27	33.4	98.2	5.31	5.5	1350	40.2	27.7	0.69	1.72	46.1	23.5	3.2
	11.0	2.9	6.7	1150	41.3	2.33	33.4	103.3	5.19	6.1	1150	39.7	23.7	0.60	1.57	45.0	25.3	2.8
				1350	42.9	2.28	35.1	99.4	5.51	5.7	1350	40.9	27.8	0.68	1.63	46.5	25.1	3.1
80	5.0	0.8	1.8	1150	39.3	2.31	31.4	101.6	4.99	6.5	1150	37.5	22.3	0.60	2.01	44.3	18.6	4.4
				1350	40.8	2.27	33.1	98.0	5.27	6.0	1350	38.7	26.2	0.68	2.10	45.8	18.4	4.6
	8.0	1.6	3.8	1150	42.6	2.33	34.7	104.3	5.36	6.7	1150	37.7	22.5	0.60	1.87	44.1	20.1	4.1
				1350	44.4	2.27	36.6	100.4	5.72	6.1	1350	38.8	26.5	0.68	1.95	45.4	19.9	4.4
	11.0	2.8	6.5	1150	44.8	2.36	36.8	106.1	5.57	6.9	1150	38.5	22.7	0.59	1.79	44.6	21.5	3.8
				1350	46.6	2.29	38.8	102.0	5.95	6.3	1350	39.7	26.7	0.67	1.87	46.1	21.3	4.2
90	5.0	0.7	1.7	1150	42.1	2.35	34.1	103.9	5.26	7.2	1150	36.3	21.3	0.59	2.21	43.9	16.4	5.9
				1350	43.7	2.30	35.9	100.0	5.58	6.7	1350	37.5	25.0	0.67	2.30	45.3	16.3	6.2
	8.0	1.6	3.6	1150	45.8	2.36	37.7	106.8	5.68	7.4	1150	36.3	21.5	0.59	2.10	43.5	17.3	5.5
				1350	47.6	2.28	39.9	102.7	6.12	6.9	1350	37.3	25.4	0.68	2.18	44.8	17.2	5.9
	11.0	2.7	6.2	1150	48.3	2.38	40.1	108.9	5.93	7.7	1150	37.3	21.8	0.58	2.01	44.2	18.6	5.1
				1350	50.3	2.31	42.4	104.5	6.39	7.1	1350	38.5	25.6	0.66	2.10	45.7	18.3	5.6
100	5.0	0.7	1.7	Operation not recommended							Operation not recommended							
	8.0	1.5	3.5								1150	35.2	22.5	0.64	2.42	43.5	14.6	7.1
											1350	36.3	26.5	0.73	2.51	44.9	14.4	7.7
	11.0	2.6	6.0								1150	36.5	22.8	0.63	2.33	44.5	15.7	6.6
											1350	37.6	26.8	0.71	2.43	45.9	15.5	7.3
110	5.0	0.7	1.6								Operation not recommended							
	8.0	1.5	3.4								1150	31.6	21.2	0.67	2.69	40.8	11.7	9.0
											1350	32.6	24.9	0.76	2.80	42.2	11.6	9.8
	11.0	2.5	5.8								1150	33.1	21.6	0.65	2.61	42.0	12.7	8.4
											1350	34.0	25.3	0.74	2.72	43.3	12.5	9.3
120	5.0	0.7	1.5								Operation not recommended							
	8.0	1.4	3.3								1150	29.1	20.6	0.71	3.01	39.4	9.7	11.2
											1350	30.1	24.2	0.80	3.14	40.8	9.6	12.1
	11.0	2.4	5.6								1150	30.8	21.0	0.68	2.92	40.8	10.6	10.4
											1350	31.6	24.7	0.78	3.06	42.0	10.3	11.5

9/16/14

WaterFurnace works continually to improve its products. As a result, the design and specifications of each product at the time of order may be changed without notice. Please contact WaterFurnace at 1-888-929-2837 for latest design and specifications. Purchaser's approval of this data set signifies that the equipment is acceptable under the provisions of the job specification. Statements and other information contained herein are not express warranties and do not form the basis of any bargain between the parties, but are merely WaterFurnace's opinion or commendation of its products. The latest version of this document is available at www.waterfurnace.com.

Performance Data cont.

ND049 - Dual Capacity with Variable Speed or 5-Speed ECM High Speed (1550 cfm)

EWT °F	Flow Rate GPM	WPD		HEATING - EAT 70°F							COOLING - EAT 80/67 °F							
		PSI	FT/HD	Airflow CFM	HC MBtu/h	Power kW	HE MBtu/h	LAT °F	COP	HWC Mbtu/h	Airflow CFM	TC Mbtu/h	SC Mbtu/h	S/T Ratio	Power kW	HR Mbtu/h	EER	HWC Mbtu/h
20	6.0	1.3	3.0	Operation not recommended							Operation not recommended							
	9.0	2.5	5.7															
	12.0	4.0	9.2	1350	32.6	2.94	22.6	92.4	3.25	5.3								
				1550	33.8	2.98	23.6	90.2	3.32	4.8								
30	6.0	1.2	2.9	Operation not recommended							Operation not recommended							
	9.0	2.4	5.5	1350	36.2	2.99	26.0	94.8	3.55	5.6	1350	51.5	28.2	0.55	1.80	57.6	28.6	---
				1550	37.3	3.01	27.0	92.3	3.63	5.2	1550	52.3	30.8	0.59	1.89	58.8	27.6	---
	12.0	3.9	8.9	1350	37.1	3.01	26.8	95.4	3.61	5.6	1350	51.7	28.2	0.54	1.74	57.7	29.7	---
				1550	38.4	3.05	28.0	92.9	3.69	5.3	1550	53.0	30.8	0.58	1.83	59.2	29.0	---
40	6.0	1.2	2.8	Operation not recommended							Operation not recommended							
	9.0	2.3	5.3	1350	40.9	3.11	30.3	98.0	3.86	6.2	1350	52.9	29.7	0.56	2.01	59.8	26.3	-
				1550	42.3	3.11	31.7	95.3	3.99	5.7	1550	53.9	32.5	0.60	2.11	61.1	25.6	-
	12.0	3.7	8.7	1350	42.2	3.13	31.5	98.9	3.96	6.4	1350	53.3	29.7	0.56	1.95	60.0	27.3	-
				1550	43.7	3.15	32.9	96.1	4.07	5.8	1550	54.5	32.5	0.60	2.04	61.5	26.7	-
50	6.0	1.2	2.7	1350	42.3	3.12	31.7	99.0	3.98	6.7	1350	52.9	28.8	0.54	2.63	61.8	20.1	3.0
				1550	43.7	3.12	33.0	96.1	4.10	6.2	1550	54.5	34.0	0.62	2.74	63.9	19.9	3.2
	9.0	2.2	5.2	1350	45.6	3.22	34.6	101.3	4.15	6.9	1350	54.0	28.9	0.54	2.27	61.8	23.8	2.8
				1550	47.3	3.20	36.4	98.3	4.34	6.4	1550	55.7	34.1	0.61	2.38	63.8	23.4	3.0
	12.0	3.6	8.4	1350	47.3	3.24	36.3	102.5	4.28	7.2	1350	54.4	28.9	0.53	2.14	61.7	25.4	2.6
				1550	48.9	3.24	37.8	99.2	4.42	6.5	1550	56.0	34.1	0.61	2.25	63.7	24.9	2.9
60	6.0	1.1	2.6	1350	46.3	3.26	35.2	101.8	4.16	7.6	1350	52.5	29.1	0.55	2.78	62.0	18.9	3.7
				1550	48.0	3.24	36.9	98.7	4.34	7.0	1550	54.1	34.3	0.63	2.90	64.0	18.7	3.9
	9.0	2.2	5.0	1350	50.1	3.34	38.7	104.4	4.40	7.8	1350	53.4	29.3	0.55	2.47	61.8	21.6	3.4
				1550	52.1	3.30	40.8	101.1	4.62	7.2	1550	55.0	34.5	0.63	2.58	63.8	21.3	3.7
	12.0	3.5	8.1	1350	52.2	3.37	40.7	105.8	4.54	8.0	1350	54.0	29.4	0.55	2.34	61.9	23.0	3.2
				1550	54.1	3.33	42.7	102.3	4.76	7.4	1550	55.6	34.6	0.62	2.45	63.9	22.7	3.5
70	6.0	1.1	2.5	1350	50.4	3.40	38.8	104.5	4.34	8.5	1350	52.1	29.4	0.56	2.94	62.1	17.7	4.6
				1550	52.3	3.36	40.9	101.3	4.56	7.9	1550	53.7	34.6	0.64	3.07	64.2	17.5	4.9
	9.0	2.1	4.9	1350	54.7	3.46	42.9	107.5	4.63	8.8	1350	52.6	29.7	0.56	2.66	61.7	19.8	4.3
				1550	56.8	3.40	45.2	103.9	4.90	8.1	1550	54.3	34.9	0.64	2.78	63.8	19.5	4.6
	12.0	3.4	7.9	1350	57.2	3.50	45.2	109.2	4.79	9.0	1350	53.6	29.9	0.56	2.54	62.2	21.1	4.0
				1550	59.3	3.42	47.6	105.4	5.08	8.3	1550	55.2	35.1	0.64	2.64	64.2	20.9	4.4
80	6.0	1.1	2.5	1350	54.3	3.56	42.2	107.2	4.47	9.6	1350	49.7	28.5	0.57	3.11	60.3	16.0	5.8
				1550	56.4	3.50	44.5	103.7	4.73	8.8	1550	51.3	33.5	0.65	3.25	62.3	15.8	6.2
	9.0	2.0	4.7	1350	59.0	3.60	46.7	110.5	4.80	9.8	1350	50.0	28.8	0.58	2.89	59.8	17.3	5.4
				1550	61.4	3.51	49.4	106.7	5.13	9.1	1550	51.4	33.9	0.66	3.01	61.7	17.1	5.9
	12.0	3.3	7.6	1350	62.0	3.64	49.6	112.5	4.99	10.1	1350	51.1	29.1	0.57	2.77	60.5	18.5	5.0
				1550	64.5	3.54	52.4	108.5	5.34	9.4	1550	52.7	34.2	0.65	2.88	62.5	18.3	5.6
90	6.0	1.0	2.4	1350	58.2	3.72	45.6	109.9	4.59	10.7	1350	47.3	27.6	0.58	3.30	58.5	14.3	7.3
				1550	60.5	3.63	48.1	106.1	4.88	9.9	1550	48.8	32.4	0.66	3.43	60.5	14.2	7.7
	9.0	2.0	4.5	1350	63.3	3.74	50.6	113.4	4.97	11.1	1350	47.3	27.9	0.59	3.13	57.9	15.1	6.8
				1550	65.9	3.61	53.6	109.4	5.35	10.2	1550	48.6	32.9	0.68	3.24	59.6	15.0	7.4
	12.0	3.2	7.3	1350	66.8	3.78	53.9	115.8	5.18	11.4	1350	48.6	28.2	0.58	2.99	58.8	16.2	6.3
				1550	69.6	3.66	57.1	111.6	5.58	10.6	1550	50.1	33.2	0.66	3.13	60.8	16.0	7.0
100	6.0	1.0	2.3	Operation not recommended							Operation not recommended							
	9.0	1.9	4.4								1350	44.3	27.1	0.61	3.49	56.2	12.7	8.4
											1550	45.6	31.9	0.70	3.62	58.0	12.6	9.2
	12.0	3.1	7.1								1350	45.9	27.5	0.60	3.36	57.4	13.7	7.8
											1550	47.3	32.3	0.68	3.51	59.2	13.5	8.7
110	6.0	1.0	2.2								Operation not recommended							
	9.0	1.8	4.2								1350	41.2	26.3	0.64	3.85	54.4	10.7	10.3
											1550	42.6	30.9	0.73	4.01	56.3	10.6	11.2
	12.0	2.9	6.8								1350	43.2	26.8	0.62	3.73	55.9	11.6	9.6
											1550	44.4	31.4	0.71	3.89	57.7	11.4	10.7
120	6.0	0.9	2.1								Operation not recommended							
	9.0	1.7	4.0								1350	40.1	27.7	0.69	4.35	54.9	9.2	12.5
											1550	40.8	30.1	0.74	4.46	56.0	9.1	13.5
	12.0	2.8	6.5								1350	40.4	27.7	0.69	4.21	54.8	9.6	11.6
											1550	41.3	30.1	0.73	4.34	56.1	9.5	12.9

9/16/14

WaterFurnace works continually to improve its products. As a result, the design and specifications of each product at the time of order may be changed without notice. Please contact WaterFurnace at 1-888-929-2837 for latest design and specifications. Purchaser's approval of this data set signifies that the equipment is acceptable under the provisions of the job specification. Statements and other information contained herein are not express warranties and do not form the basis of any bargain between the parties, but are merely WaterFurnace's opinion or commendation of its products. The latest version of this document is available at www.waterfurnace.com.

Performance Data cont.

ND064 - Dual Capacity with Variable Speed or 5-Speed ECM Low Speed (1500 cfm)

EWT °F	Flow Rate GPM	WPD		HEATING - EAT 70°F							COOLING - EAT 80/67 °F							
		PSI	FT/HD	Airflow CFM	HC MBtu/h	Power kW	HE MBtu/h	LAT °F	COP	HWC Mbtu/h	Airflow CFM	TC Mbtu/h	SC Mbtu/h	S/T Ratio	Power kW	HR Mbtu/h	EER	HWC Mbtu/h
20	6.0	1.0	2.4	Operation not recommended							Operation not recommended							
	10.0	2.7	6.2															
	14.0	5.1	11.8	1250	28.6	2.73	19.3	91.2	3.07	4.9								
				1500	29.6	2.77	20.1	88.3	3.13	4.5								
30	6.0	1.0	2.3	Operation not recommended							Operation not recommended							
	10.0	2.6	6.0	1250	31.9	2.70	22.7	93.6	3.46	5.0	1250	50.0	30.0	0.60	1.38	54.7	36.3	-
				1500	33.1	2.74	23.7	90.4	3.54	4.6	1500	50.8	32.8	0.65	1.45	55.8	35.0	-
	14.0	5.0	11.5	1250	33.1	2.70	23.8	94.5	3.58	5.1	1250	50.3	30.0	0.60	1.34	54.8	37.6	-
				1500	34.2	2.74	24.9	91.1	3.66	4.7	1500	51.5	32.8	0.64	1.40	56.3	36.7	-
40	6.0	1.0	2.3	Operation not recommended							Operation not recommended							
	10.0	2.5	5.9	1250	37.4	2.79	27.9	97.7	3.92	5.3	1250	51.5	30.7	0.60	1.54	56.8	33.5	-
				1500	38.4	2.80	28.9	93.7	4.02	4.9	1500	52.5	33.6	0.64	1.61	58.0	32.5	-
	14.0	4.8	11.1	1250	38.6	2.80	29.1	98.6	4.04	5.5	1250	51.9	30.7	0.59	1.49	57.0	34.8	-
				1500	39.7	2.81	30.1	94.5	4.14	5.0	1500	53.1	33.6	0.63	1.56	58.4	34.0	-
50	6.0	0.9	2.2	1250	42.2	2.83	32.5	101.2	4.37	5.6	1250	52.8	30.0	0.57	1.74	58.7	30.4	2.0
				1500	43.3	2.83	33.7	96.7	4.49	5.2	1500	54.3	34.0	0.63	1.83	60.6	29.7	2.1
	10.0	2.5	5.7	1250	42.8	2.88	33.0	101.7	4.36	5.7	1250	52.9	30.2	0.57	1.67	58.7	31.7	1.9
				1500	43.8	2.86	34.0	97.0	4.48	5.3	1500	54.5	34.3	0.63	1.75	60.5	31.1	2.0
	14.0	4.7	10.8	1250	44.1	2.90	34.2	102.7	4.46	5.9	1250	53.1	30.2	0.57	1.64	58.7	32.3	1.7
				1500	45.1	2.88	35.3	97.8	4.59	5.4	1500	54.6	34.3	0.63	1.72	60.5	31.8	1.9
60	6.0	0.9	2.1	1250	46.6	2.91	36.7	104.5	4.70	6.1	1250	51.4	29.8	0.58	1.96	58.1	26.2	2.8
				1500	47.6	2.89	37.8	99.4	4.84	5.7	1500	53.0	33.7	0.64	2.06	60.0	25.8	3.0
	10.0	2.4	5.5	1250	48.1	2.96	38.0	105.6	4.76	6.3	1250	51.6	30.1	0.58	1.90	58.1	27.2	2.6
				1500	48.9	2.92	38.9	100.2	4.90	5.8	1500	53.2	34.0	0.64	1.99	60.0	26.8	2.9
	14.0	4.5	10.4	1250	49.2	2.99	39.0	106.5	4.83	6.5	1250	51.9	30.2	0.58	1.86	58.2	27.9	2.5
				1500	50.0	2.95	40.0	100.9	4.98	6.0	1500	53.4	34.1	0.64	1.95	60.1	27.4	2.7
70	6.0	0.9	2.0	1250	51.1	2.99	40.9	107.9	5.01	6.8	1250	50.0	29.7	0.59	2.19	57.5	22.9	4.0
				1500	52.0	2.94	42.0	102.1	5.18	6.3	1500	51.6	33.3	0.64	2.28	59.4	22.6	4.2
	10.0	2.3	5.3	1250	53.3	3.04	42.9	109.5	5.13	7.0	1250	50.3	29.9	0.59	2.13	57.6	23.7	3.7
				1500	53.9	2.98	43.7	103.3	5.31	6.5	1500	51.9	33.7	0.65	2.22	59.5	23.4	4.0
	14.0	4.4	10.1	1250	54.3	3.08	43.8	110.2	5.17	7.2	1250	50.7	30.1	0.59	2.08	57.8	24.3	3.5
				1500	54.9	3.01	44.6	103.9	5.35	6.6	1500	52.2	33.8	0.65	2.17	59.6	24.0	3.9
80	6.0	0.9	2.0	1250	55.4	3.09	44.9	111.0	5.26	7.6	1250	47.2	28.5	0.60	2.49	55.7	18.9	5.5
				1500	55.9	3.02	45.6	104.5	5.43	7.0	1500	48.6	31.8	0.65	2.58	57.4	18.9	5.9
	10.0	2.2	5.1	1250	58.5	3.14	47.8	113.4	5.47	7.8	1250	47.6	28.7	0.60	2.43	55.9	19.6	5.2
				1500	58.8	3.04	48.4	106.3	5.66	7.2	1500	49.0	32.2	0.66	2.52	57.6	19.4	5.6
	14.0	4.2	9.8	1250	59.2	3.18	48.4	113.9	5.46	8.0	1250	47.9	28.9	0.60	2.39	56.0	20.0	4.8
				1500	59.5	3.09	48.9	106.7	5.65	7.4	1500	49.4	32.4	0.65	2.48	57.8	19.9	5.3
90	6.0	0.8	1.9	1250	59.7	3.18	48.9	114.2	5.51	8.5	1250	44.3	27.2	0.61	2.80	53.8	15.8	7.4
				1500	59.8	3.09	49.3	106.9	5.67	7.8	1500	45.6	30.2	0.66	2.88	55.4	15.9	7.8
	10.0	2.1	5.0	1250	63.7	3.23	52.7	117.2	5.79	8.7	1250	44.8	27.5	0.61	2.73	54.1	16.4	6.9
				1500	63.7	3.11	53.1	109.3	6.01	8.1	1500	46.1	30.6	0.66	2.83	55.8	16.3	7.5
	14.0	4.1	9.4	1250	64.1	3.28	53.0	117.5	5.74	9.0	1250	45.1	27.8	0.62	2.70	54.3	16.7	6.4
				1500	64.0	3.16	53.2	109.5	5.94	8.3	1500	46.6	30.9	0.66	2.78	56.1	16.8	7.1
100	6.0	0.8	1.8	Operation not recommended							Operation not recommended							
	10.0	2.1	4.8								1250	41.7	26.8	0.64	3.13	52.4	13.3	9.0
											1500	43.0	29.6	0.69	3.22	54.0	13.4	9.7
	14.0	3.9	9.1								1250	42.2	27.1	0.64	3.09	52.7	13.6	8.3
											1500	43.5	30.0	0.69	3.17	54.3	13.7	9.2
110	6.0	0.8	1.8								Operation not recommended							
	10.0	2.0	4.6								1250	38.7	26.0	0.67	3.53	50.7	10.9	11.3
											1500	39.9	28.6	0.72	3.60	52.2	11.1	12.3
	14.0	3.8	8.7								1250	39.2	26.4	0.67	3.48	51.1	11.3	10.5
											1500	40.4	29.0	0.72	3.55	52.5	11.4	11.7
120	6.0	0.7	1.7								Operation not recommended							
	10.0	1.9	4.4								1250	36.7	26.7	0.73	4.01	50.4	9.2	14.0
											1500	37.4	29.0	0.78	4.11	51.4	9.1	15.2
	14.0	3.6	8.4								1250	37.0	26.7	0.72	3.88	50.2	9.5	13.0
											1500	37.8	29.0	0.77	4.00	51.4	9.5	14.5

9/16/14

WaterFurnace works continually to improve its products. As a result, the design and specifications of each product at the time of order may be changed without notice. Please contact WaterFurnace at 1-888-929-2837 for latest design and specifications. Purchaser's approval of this data set signifies that the equipment is acceptable under the provisions of the job specification. Statements and other information contained herein are not express warranties and do not form the basis of any bargain between the parties, but are merely WaterFurnace's opinion or commendation of its products. The latest version of this document is available at www.waterfurnace.com.

Performance Data cont.

ND064 - Dual Capacity with Variable Speed or 5-Speed ECM High Speed (1800 cfm)

EWT °F	Flow Rate GPM	WPD		HEATING - EAT 70°F							COOLING - EAT 80/67 °F							
		PSI	FT/HD	Airflow CFM	HC MBtu/h	Power kW	HE MBtu/h	LAT °F	COP	HWC Mbtu/h	Airflow CFM	TC Mbtu/h	SC Mbtu/h	S/T Ratio	Power kW	HR Mbtu/h	EER	HWC Mbtu/h
20	8.0	1.8	4.2	Operation not recommended							Operation not recommended							
	12.0	3.8	8.8															
	16.0	6.5	15.1	1500	39.7	3.44	28.0	94.5	3.39	6.2								
				1800	40.7	3.60	28.4	90.9	3.31	5.6								
30	8.0	1.8	4.1	Operation not recommended							Operation not recommended							
	12.0	3.7	8.6	1500	45.8	3.46	34.1	98.3	3.89	6.5	1500	64.3	41.0	0.64	2.29	72.1	28.1	---
				1800	47.1	3.68	34.6	94.2	3.75	6.0	1800	65.3	44.8	0.69	2.41	73.5	27.1	---
	16.0	6.4	14.7	1500	46.5	3.54	34.4	98.7	3.84	6.7	1500	64.6	41.0	0.63	2.22	72.2	29.1	---
				1800	47.6	3.71	34.9	94.5	3.76	6.1	1800	66.2	44.8	0.68	2.33	74.1	28.4	---
40	8.0	1.7	4.0	Operation not recommended							Operation not recommended							
	12.0	3.6	8.3	1500	52.7	3.68	40.1	102.5	4.19	7.2	1500	66.8	41.9	0.63	2.66	75.9	25.1	---
				1800	53.9	3.84	40.8	97.7	4.11	6.6	1800	68.1	45.8	0.67	2.79	77.6	24.4	---
	16.0	6.2	14.2	1500	53.5	3.75	40.7	103.0	4.18	7.4	1500	67.4	41.9	0.62	2.58	76.2	26.1	---
				1800	54.7	3.88	41.5	98.1	4.13	6.7	1800	68.9	45.8	0.66	2.70	78.1	25.5	---
50	8.0	1.7	3.8	1500	56.3	3.84	43.2	104.7	4.30	7.8	1500	68.7	42.2	0.61	3.00	78.9	22.9	4.0
				1800	57.4	3.95	44.0	99.6	4.26	7.2	1800	70.1	45.9	0.65	3.19	81.0	22.0	4.2
	12.0	3.5	8.1	1500	59.5	3.91	46.2	106.7	4.46	8.0	1500	69.4	42.6	0.61	2.94	79.4	23.6	3.7
				1800	60.7	4.01	47.0	101.2	4.44	7.4	1800	70.8	46.4	0.65	3.12	81.5	22.7	4.0
	16.0	6.0	13.8	1500	60.5	3.95	47.0	107.3	4.48	8.2	1500	70.1	43.1	0.61	2.89	80.0	24.3	3.4
				1800	61.8	4.05	48.0	101.8	4.47	7.5	1800	71.5	46.8	0.65	3.07	82.0	23.3	3.8
60	8.0	1.6	3.7	1500	63.1	4.12	49.1	109.0	4.49	8.7	1500	68.2	42.2	0.62	3.30	79.5	20.7	4.8
				1800	64.5	4.18	50.2	103.2	4.52	8.0	1800	70.0	45.9	0.66	3.51	81.9	19.9	5.1
	12.0	3.4	7.8	1500	66.0	4.18	51.7	110.7	4.62	9.0	1500	68.9	42.6	0.62	3.23	79.9	21.3	4.5
				1800	67.4	4.24	53.0	104.7	4.66	8.3	1800	70.7	46.3	0.66	3.43	82.4	20.6	4.9
	16.0	5.8	13.4	1500	67.4	4.23	53.0	111.6	4.67	9.2	1500	69.6	43.1	0.62	3.18	80.4	21.9	4.2
				1800	69.0	4.28	54.3	105.5	4.72	8.5	1800	71.4	46.8	0.66	3.38	82.9	21.1	4.6
70	8.0	1.6	3.6	1500	69.9	4.39	55.0	113.2	4.66	9.8	1500	67.7	42.2	0.62	3.60	80.0	18.8	6.1
				1800	71.5	4.42	56.4	106.8	4.74	9.0	1800	69.8	45.9	0.66	3.83	82.9	18.2	6.4
	12.0	3.3	7.5	1500	72.5	4.46	57.3	114.8	4.77	10.1	1500	68.4	42.6	0.62	3.53	80.4	19.4	5.7
				1800	74.2	4.47	58.9	108.1	4.86	9.3	1800	70.6	46.3	0.66	3.75	83.4	18.8	6.1
	16.0	5.6	12.9	1500	74.4	4.51	59.0	115.9	4.83	10.4	1500	69.0	43.0	0.62	3.46	80.9	19.9	5.3
				1800	76.1	4.51	60.7	109.1	4.95	9.6	1800	71.2	46.8	0.66	3.69	83.8	19.3	5.8
80	8.0	1.5	3.5	1500	76.9	4.70	60.9	117.5	4.80	11.0	1500	63.2	40.8	0.65	3.89	76.5	16.3	7.7
				1800	78.7	4.67	62.7	110.5	4.94	10.2	1800	65.5	44.3	0.68	4.14	79.7	15.8	8.1
	12.0	3.2	7.3	1500	78.7	4.76	62.5	118.6	4.85	11.3	1500	63.9	41.1	0.64	3.81	76.9	16.8	7.1
				1800	80.6	4.71	64.6	111.5	5.02	10.5	1800	66.2	44.7	0.68	4.06	80.0	16.3	7.7
	16.0	5.4	12.5	1500	81.1	4.81	64.7	120.1	4.94	11.7	1500	64.5	41.6	0.65	3.75	77.3	17.2	6.6
				1800	83.2	4.76	66.9	112.8	5.13	10.8	1800	66.9	45.2	0.68	3.99	80.5	16.8	7.4
90	8.0	1.4	3.3	1500	83.9	5.00	66.8	121.8	4.92	12.4	1500	58.7	39.3	0.67	4.18	72.9	14.0	9.6
				1800	85.9	4.93	69.1	114.2	5.11	11.4	1800	61.3	42.7	0.70	4.45	76.5	13.8	10.2
	12.0	3.0	7.0	1500	85.0	5.05	67.7	122.5	4.93	12.7	1500	59.3	39.6	0.67	4.10	73.3	14.5	9.0
				1800	87.1	4.95	70.2	114.8	5.16	11.8	1800	61.8	43.1	0.70	4.36	76.7	14.2	9.7
	16.0	5.2	12.0	1500	87.9	5.12	70.4	124.3	5.03	13.1	1500	59.9	40.1	0.67	4.03	73.7	14.9	8.3
				1800	90.2	5.00	73.1	116.4	5.29	12.2	1800	62.5	43.5	0.70	4.29	77.2	14.6	9.2
100	8.0	1.4	3.2	Operation not recommended							Operation not recommended							
	12.0	2.9	6.8								1500	55.2	37.5	0.68	4.47	70.4	12.3	11.1
											1800	57.8	40.7	0.70	4.77	74.0	12.1	12.1
	16.0	5.0	11.6								1500	55.7	37.9	0.68	4.39	70.7	12.7	10.3
											1800	58.4	41.2	0.71	4.69	74.3	12.5	11.5
110	8.0	1.3	3.1								Operation not recommended							
	12.0	2.8	6.5								1500	51.0	35.3	0.69	4.84	67.5	10.5	13.6
											1800	53.7	38.3	0.71	5.17	71.4	10.4	14.8
	16.0	4.8	11.2								1500	51.5	35.7	0.69	4.76	67.7	10.8	12.7
											1800	54.2	38.8	0.72	5.08	71.5	10.7	14.1
120	8.0	1.3	3.0								Operation not recommended							
	12.0	2.7	6.3								1500	51.4	36.4	0.71	5.62	70.6	9.2	16.5
											1800	52.4	39.5	0.75	5.76	72.0	9.1	17.9
	16.0	4.6	10.7								1500	51.9	36.4	0.70	5.44	70.4	9.5	15.3
											1800	53.0	39.5	0.75	5.61	72.1	9.4	17.0

9/16/14

WaterFurnace works continually to improve its products. As a result, the design and specifications of each product at the time of order may be changed without notice. Please contact WaterFurnace at 1-888-929-2837 for latest design and specifications. Purchaser's approval of this data set signifies that the equipment is acceptable under the provisions of the job specification. Statements and other information contained herein are not express warranties and do not form the basis of any bargain between the parties, but are merely WaterFurnace's opinion or commendation of its products. The latest version of this document is available at www.waterfurnace.com.

Performance Data cont.

ND072 - Dual Capacity with Variable Speed or 5-Speed ECM Low Speed (1700 cfm)

EWT °F	Flow Rate GPM	WPD		HEATING - EAT 70°F							COOLING - EAT 80/67 °F							
		PSI	FT/HD	Airflow CFM	HC MBtu/h	Power kW	HE MBtu/h	LAT °F	COP	HWC Mbtu/h	Airflow CFM	TC Mbtu/h	SC Mbtu/h	S/T Ratio	Power kW	HR Mbtu/h	EER	HWC Mbtu/h
20	10.0	2.3	5.4	Operation not recommended							Operation not recommended							
	13.0	3.6	8.2															
	16.0	5.0	11.6	1400	37.2	3.74	24.4	94.6	2.91	6.0								
				1700	39.0	3.79	26.0	91.2	3.02	5.4								
30	10.0	2.3	5.3	Operation not recommended							Operation not recommended							
	13.0	3.5	8.0	1400	41.0	3.81	28.0	97.1	3.15	6.1	1400	54.1	34.6	0.64	1.81	60.3	29.9	---
				1700	43.0	3.86	29.8	93.4	3.27	5.6	1700	55.0	37.8	0.69	1.91	61.5	28.8	---
	16.0	4.9	11.3	1400	42.8	3.81	29.8	98.3	3.29	6.3	1400	54.4	34.6	0.64	1.76	60.4	30.9	---
				1700	44.8	3.86	31.6	94.4	3.40	5.7	1700	55.7	37.8	0.68	1.85	62.0	30.2	---
40	10.0	2.2	5.1	Operation not recommended							Operation not recommended							
	13.0	3.4	7.8	1400	47.6	3.92	34.2	101.5	3.56	6.5	1400	56.7	36.5	0.64	2.02	63.6	28.0	---
				1700	49.7	3.93	36.3	97.1	3.71	5.9	1700	57.8	39.8	0.69	2.12	65.0	27.2	---
	16.0	4.7	11.0	1400	49.3	3.93	35.9	102.6	3.68	6.7	1400	57.2	36.5	0.64	1.96	63.9	29.1	---
				1700	51.5	3.94	38.0	98.0	3.83	6.1	1700	58.5	39.8	0.68	2.05	65.5	28.5	---
50	10.0	2.1	4.9	1400	53.4	3.98	39.8	105.3	3.93	6.8	1400	59.1	36.5	0.62	2.28	66.9	25.9	2.3
				1700	55.8	3.94	42.3	100.4	4.15	6.3	1700	60.9	41.4	0.68	2.40	69.1	25.4	2.4
	13.0	3.3	7.5	1400	54.2	4.02	40.5	105.8	3.95	7.0	1400	59.2	36.8	0.62	2.20	66.7	26.9	2.1
				1700	56.4	4.00	42.7	100.7	4.13	6.4	1700	61.0	41.8	0.68	2.32	69.0	26.3	2.3
	16.0	4.6	10.6	1400	55.8	4.04	42.0	106.9	4.04	7.2	1400	59.4	36.8	0.62	2.14	66.7	27.7	2.0
				1700	58.1	4.02	44.4	101.7	4.24	6.6	1700	61.2	41.8	0.68	2.26	68.9	27.1	2.2
60	10.0	2.1	4.8	1400	59.5	4.11	45.5	109.3	4.25	7.5	1400	58.1	36.5	0.63	2.54	66.8	22.8	3.2
				1700	62.0	4.02	48.3	103.8	4.52	6.9	1700	59.8	41.3	0.69	2.66	68.9	22.5	3.4
	13.0	3.2	7.3	1400	61.1	4.15	47.0	110.4	4.32	7.7	1400	58.3	36.9	0.63	2.46	66.7	23.7	3.0
				1700	63.6	4.07	49.7	104.6	4.57	7.1	1700	60.1	41.7	0.69	2.57	68.9	23.4	3.2
	16.0	4.4	10.3	1400	62.5	4.19	48.2	111.4	4.37	7.9	1400	58.6	37.0	0.63	2.41	66.8	24.3	2.8
				1700	65.0	4.12	51.0	105.4	4.63	7.3	1700	60.4	41.8	0.69	2.52	69.0	24.0	3.1
70	10.0	2.0	4.6	1400	65.6	4.23	51.1	113.4	4.54	8.3	1400	57.1	36.6	0.64	2.81	66.7	20.4	4.5
				1700	68.2	4.11	54.2	107.2	4.87	7.7	1700	58.8	41.2	0.70	2.91	68.7	20.2	4.8
	13.0	3.0	7.0	1400	68.1	4.27	53.5	115.0	4.67	8.5	1400	57.4	37.0	0.64	2.72	66.7	21.2	4.2
				1700	70.7	4.15	56.6	108.5	5.00	7.9	1700	59.1	41.6	0.70	2.82	68.7	20.9	4.5
	16.0	4.3	9.9	1400	69.3	4.34	54.5	115.8	4.68	8.8	1400	57.8	37.2	0.64	2.68	66.9	21.6	3.9
				1700	72.0	4.21	57.6	109.2	5.01	8.1	1700	59.6	41.8	0.70	2.77	69.1	21.5	4.3
80	10.0	1.9	4.5	1400	71.4	4.32	56.7	117.2	4.84	9.2	1400	53.4	35.3	0.66	3.12	64.1	17.1	6.2
				1700	74.0	4.17	59.8	110.3	5.21	8.5	1700	54.8	39.5	0.72	3.21	65.7	17.1	6.6
	13.0	2.9	6.8	1400	75.2	4.37	60.3	119.7	5.04	9.5	1400	53.6	35.7	0.67	3.04	64.0	17.6	5.8
				1700	77.9	4.20	63.6	112.4	5.44	8.8	1700	55.2	39.9	0.72	3.13	65.9	17.6	6.3
	16.0	4.2	9.6	1400	76.0	4.43	60.9	120.3	5.03	9.8	1400	54.0	35.9	0.66	2.99	64.2	18.0	5.4
				1700	78.7	4.27	64.1	112.8	5.40	9.1	1700	56.0	40.2	0.72	3.08	66.4	18.2	6.0
90	10.0	1.9	4.3	1400	77.3	4.41	62.2	121.1	5.14	10.3	1400	49.7	34.0	0.68	3.43	61.4	14.5	8.3
				1700	79.8	4.23	65.4	113.5	5.54	9.5	1700	51.3	37.7	0.74	3.50	63.2	14.6	8.8
	13.0	2.8	6.6	1400	82.3	4.47	67.0	124.4	5.39	10.6	1400	50.2	34.3	0.68	3.36	61.7	14.9	7.7
				1700	85.0	4.25	70.5	116.3	5.87	9.8	1700	51.8	38.2	0.74	3.43	63.5	15.1	8.4
	16.0	4.0	9.3	1400	82.8	4.53	67.3	124.7	5.36	11.0	1400	50.7	34.6	0.68	3.31	62.0	15.3	7.2
				1700	85.4	4.33	70.6	116.5	5.78	10.2	1700	52.3	38.5	0.74	3.38	63.8	15.5	8.0
100	10.0	1.8	4.2	Operation not recommended							Operation not recommended							
	13.0	2.7	6.3								1400	46.9	33.3	0.71	3.83	60.0	12.3	10.0
											1700	48.5	36.9	0.76	3.88	61.7	12.5	10.9
	16.0	3.9	8.9								1400	47.6	33.7	0.71	3.77	60.4	12.6	9.3
											1700	49.0	37.3	0.76	3.82	62.0	12.8	10.4
110	10.0	1.7	4.0								Operation not recommended							
	13.0	2.6	6.1								1400	43.7	32.2	0.74	4.30	58.3	10.2	12.7
											1700	45.1	35.5	0.79	4.32	59.9	10.5	13.8
	16.0	3.7	8.6								1400	44.4	32.7	0.74	4.24	58.9	10.5	11.8
											1700	45.7	36.0	0.79	4.26	60.2	10.7	13.1
120	10.0	1.7	3.8								Operation not recommended							
	13.0	2.5	5.8								1400	40.8	32.1	0.79	4.71	56.8	8.7	15.8
											1700	41.5	34.8	0.84	4.83	58.0	8.6	17.1
	16.0	3.6	8.2								1400	41.1	32.1	0.78	4.56	56.7	9.0	14.6
											1700	42.0	34.8	0.83	4.70	58.0	8.9	16.3

9/17/14

WaterFurnace works continually to improve its products. As a result, the design and specifications of each product at the time of order may be changed without notice. Please contact WaterFurnace at 1-888-929-2837 for latest design and specifications. Purchaser's approval of this data set signifies that the equipment is acceptable under the provisions of the job specification. Statements and other information contained herein are not express warranties and do not form the basis of any bargain between the parties, but are merely WaterFurnace's opinion or commendation of its products. The latest version of this document is available at www.waterfurnace.com.

Performance Data cont.

ND072 - Dual Capacity with Variable Speed or 5-Speed ECM High Speed (2200 cfm)

EWT °F	Flow Rate GPM	WPD		HEATING - EAT 70°F							COOLING - EAT 80/67 °F							
		PSI	FT/HD	Airflow CFM	HC MBtu/h	Power kW	HE MBtu/h	LAT °F	COP	HWC Mbtu/h	Airflow CFM	TC Mbtu/h	SC Mbtu/h	S/T Ratio	Power kW	HR Mbtu/h	EER	HWC Mbtu/h
20	12.0	3.3	7.6	Operation not recommended							Operation not recommended							
	15.0	4.7	10.8															
	18.0	6.2	14.3	1850	50.9	4.60	35.2	95.5	3.24	7.9								
				2200	52.8	4.90	36.1	92.2	3.16	7.1								
30	12.0	3.2	7.4	Operation not recommended							Operation not recommended							
	15.0	4.5	10.5	1850	57.3	4.74	41.2	98.7	3.55	8.3	1850	70.4	43.1	0.61	2.57	79.2	27.4	---
				2200	59.3	5.04	42.1	95.0	3.45	7.6	2200	71.5	47.1	0.66	2.71	80.8	26.4	---
	18.0	6.0	13.9	1850	57.8	4.78	41.5	98.9	3.54	8.6	1850	70.8	43.1	0.61	2.50	79.3	28.4	---
				2200	59.9	5.09	42.6	95.2	3.45	7.8	2200	72.5	47.1	0.65	2.62	81.4	27.7	---
40	12.0	3.1	7.1	Operation not recommended							Operation not recommended							
	15.0	4.4	10.2	1850	65.0	4.97	48.0	102.5	3.83	9.2	1850	72.9	45.8	0.63	3.15	83.6	23.2	---
				2200	67.2	5.21	49.4	98.3	3.78	8.4	2200	74.3	50.0	0.67	3.30	85.5	22.5	---
	18.0	5.8	13.5	1850	65.9	5.03	48.8	103.0	3.84	9.5	1850	73.5	45.8	0.62	3.06	83.9	24.0	---
				2200	68.2	5.26	50.2	98.7	3.80	8.6	2200	75.1	50.0	0.67	3.20	86.0	23.5	---
50	12.0	3.0	6.9	1850	68.8	5.10	51.4	104.4	3.95	9.9	1850	74.6	47.6	0.64	3.68	87.2	20.3	4.3
				2200	71.1	5.28	53.1	99.9	3.94	9.2	2200	76.2	51.7	0.68	3.91	89.6	19.5	4.6
	15.0	4.3	9.9	1850	72.7	5.20	54.9	106.4	4.10	10.3	1850	75.4	48.1	0.64	3.60	87.7	20.9	4.0
				2200	75.1	5.37	56.8	101.6	4.10	9.4	2200	76.9	52.3	0.68	3.83	90.0	20.1	4.4
	18.0	5.7	13.1	1850	74.0	5.26	56.0	107.0	4.12	10.6	1850	76.2	49.1	0.64	3.54	88.3	21.5	3.7
				2200	76.4	5.42	57.9	102.2	4.13	9.7	2200	77.7	52.8	0.68	3.77	90.6	20.6	4.2
60	12.0	2.9	6.7	1850	77.2	5.40	58.8	108.6	4.19	11.1	1850	74.0	48.1	0.65	4.01	87.7	18.4	5.3
				2200	79.7	5.50	60.9	103.5	4.24	10.3	2200	75.5	52.0	0.69	4.26	90.1	17.7	5.6
	15.0	4.1	9.6	1850	80.6	5.49	61.9	110.3	4.30	11.5	1850	74.7	48.6	0.65	3.93	88.1	19.0	4.9
				2200	83.2	5.58	64.2	105.0	4.37	10.6	2200	76.2	52.5	0.69	4.17	90.5	18.3	5.3
	18.0	5.5	12.7	1850	82.4	5.56	63.4	111.2	4.35	11.8	1850	75.5	49.4	0.65	3.86	88.7	19.6	4.6
				2200	85.1	5.63	65.9	105.8	4.43	10.9	2200	77.1	53.1	0.69	4.11	91.1	18.7	5.1
70	12.0	2.8	6.5	1850	85.5	5.68	66.1	112.8	4.41	12.5	1850	73.3	48.6	0.66	4.34	88.2	16.9	6.6
				2200	88.2	5.72	68.7	107.1	4.52	11.6	2200	74.9	52.3	0.70	4.62	90.6	16.2	7.0
	15.0	4.0	9.2	1850	88.5	5.77	68.8	114.3	4.49	12.9	1850	74.1	49.1	0.66	4.25	88.6	17.4	6.2
				2200	91.3	5.78	71.6	108.4	4.63	11.9	2200	75.6	52.8	0.70	4.52	91.0	16.7	6.7
	18.0	5.3	12.2	1850	90.8	5.85	70.9	115.4	4.55	13.3	1850	74.9	49.6	0.66	4.18	89.1	17.9	5.7
				2200	93.8	5.85	73.9	109.5	4.70	12.3	2200	76.4	53.4	0.70	4.45	91.6	17.2	6.4
80	12.0	2.7	6.3	1850	93.6	6.03	73.0	116.9	4.55	14.1	1850	69.6	46.8	0.67	4.63	85.4	15.0	8.4
				2200	96.6	5.98	76.2	110.7	4.73	13.0	2200	71.1	50.6	0.71	4.92	87.9	14.4	8.9
	15.0	3.9	8.9	1850	95.8	6.11	75.0	118.0	4.60	14.5	1850	70.3	47.3	0.67	4.53	85.8	15.5	7.8
				2200	98.9	6.03	78.3	111.6	4.81	13.4	2200	71.8	51.0	0.71	4.82	88.2	14.9	8.4
	18.0	5.1	11.8	1850	98.7	6.19	77.6	119.4	4.68	15.0	1850	71.1	48.0	0.67	4.46	86.3	16.0	7.2
				2200	102.0	6.09	81.2	112.9	4.91	13.8	2200	72.5	51.6	0.71	4.75	88.7	15.3	8.0
90	12.0	2.6	6.0	1850	101.7	6.37	79.9	120.9	4.68	15.8	1850	65.9	45.0	0.68	4.92	82.7	13.4	10.5
				2200	105.0	6.24	83.7	114.2	4.93	14.7	2200	67.3	48.9	0.73	5.23	85.2	12.9	11.1
	15.0	3.7	8.6	1850	103.1	6.44	81.1	121.6	4.69	16.3	1850	66.6	45.4	0.68	4.81	83.0	13.8	9.8
				2200	106.5	6.27	85.0	114.8	4.97	15.1	2200	67.9	49.3	0.73	5.13	85.4	13.3	10.6
	18.0	4.9	11.4	1850	106.7	6.53	84.4	123.4	4.79	16.8	1850	67.3	46.3	0.69	4.73	83.5	14.2	9.1
				2200	110.2	6.34	88.6	116.4	5.09	15.6	2200	68.7	49.8	0.73	5.04	85.9	13.6	10.1
100	12.0	2.5	5.8	Operation not recommended							Operation not recommended							
	15.0	3.6	8.3								1850	63.2	44.4	0.70	5.29	81.2	12.0	12.2
											2200	64.5	48.0	0.74	5.63	83.7	11.5	13.2
	18.0	4.8	11.0								1850	63.9	45.1	0.71	5.20	81.6	12.3	11.3
											2200	65.2	48.5	0.74	5.53	84.1	11.8	12.5
110	12.0	2.4	5.6								Operation not recommended							
	15.0	3.5	8.0								1850	59.8	43.5	0.73	5.76	79.4	10.4	14.9
											2200	61.0	46.8	0.77	6.13	81.9	10.0	16.1
	18.0	4.6	10.6								1850	60.4	43.9	0.73	5.66	79.8	10.7	13.8
											2200	61.7	47.2	0.77	6.02	82.2	10.2	15.3
120	12.0	2.3	5.4								Operation not recommended							
	15.0	3.3	7.7								1850	55.6	41.7	0.75	6.52	77.9	8.5	18.0
											2200	56.6	45.3	0.80	6.69	79.4	8.5	19.5
	18.0	4.4	10.2								1850	56.1	41.7	0.74	6.31	77.6	8.9	16.7
											2200	57.3	45.3	0.79	6.51	79.5	8.8	18.5

9/17/14

WaterFurnace works continually to improve its products. As a result, the design and specifications of each product at the time of order may be changed without notice. Please contact WaterFurnace at 1-888-929-2837 for latest design and specifications. Purchaser's approval of this data set signifies that the equipment is acceptable under the provisions of the job specification. Statements and other information contained herein are not express warranties and do not form the basis of any bargain between the parties, but are merely WaterFurnace's opinion or commendation of its products. The latest version of this document is available at www.waterfurnace.com.

Wiring Schematics

Aurora Advanced with ECM and IntelliStart

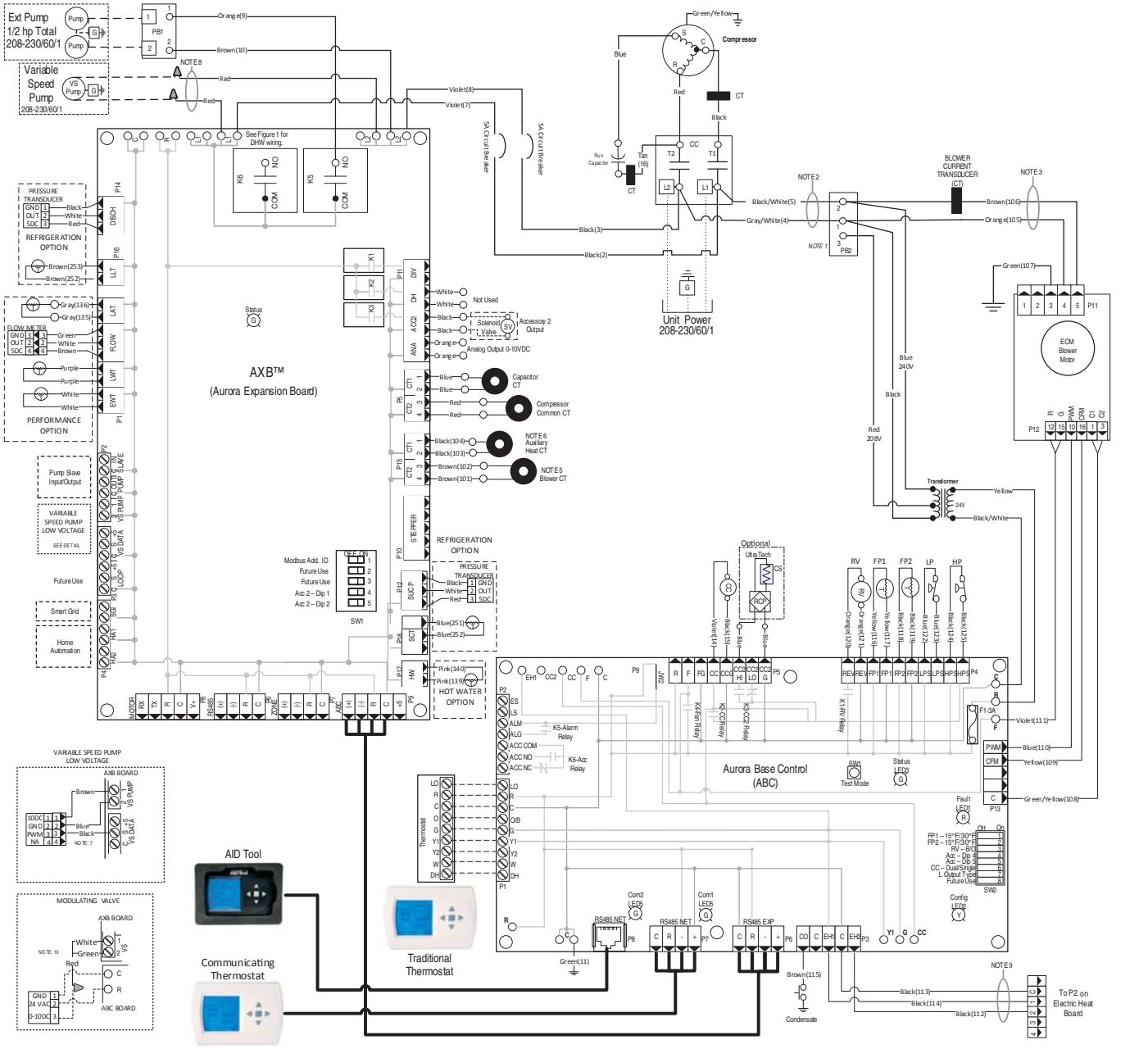

WaterFurnace works continually to improve its products. As a result, the design and specifications of each product at the time of order may be changed without notice. Please contact WaterFurnace at 1-888-929-2837 for latest design and specifications. Purchaser's approval of this data set signifies that the equipment is acceptable under the provisions of the job specification. Statements and other information contained herein are not express warranties and do not form the basis of any bargain between the parties, but are merely WaterFurnace's opinion or commendation of its products. The latest version of this document is available at www.waterfurnace.com.

Wiring Schematics cont.

Aurora Advanced with ECM and IntelliStart cont.

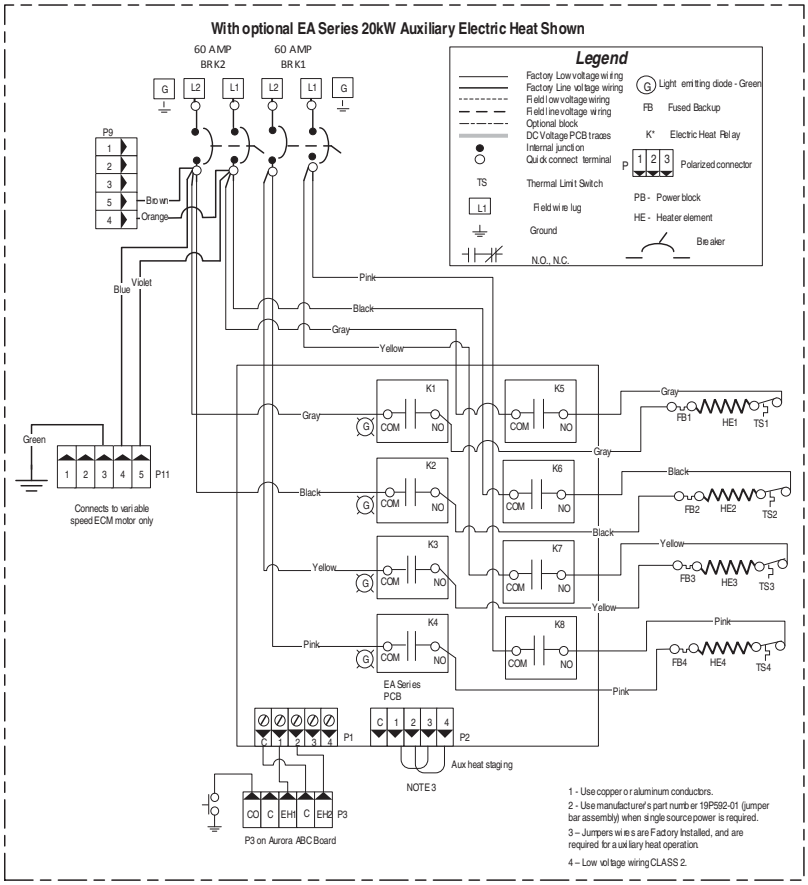

Notes

1 - Switch blue and red wires for 208V operation.
2 - The blk/wh and gray/wh wires are removed when Aux Heat is installed
3 – When Auxiliary Heat is field installed the harness will then be connected to the auxiliary heat unit. The auxiliary heat unit will then power the blower. Refer to EAS/EAM/EAL Auxiliary Heat kit installation instructions.
4 – Low voltage wiring CLASS 2.
5 – Brown blower power wire routed through Current Transducer two times.
6 – Field Connected: Refer to Installation Manual and Auxiliary Heat Instructions for Current Transducer installation.
7 – Variable speed pump low voltage harness provided with Variable Speed Flow Center
8 – Variable speed pump power wires to connect the pump to L1 and L2 on the AXB board are provided with Variable Speed Flow Center.
9 - Wires provided for Auxiliary Heat low voltage control. Wires are secured at blower.
10 - Wiring harness supplied with valve.

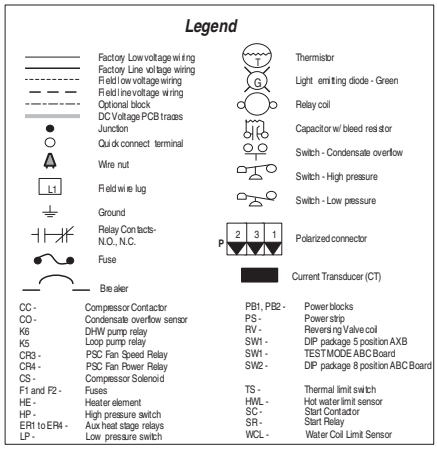

WaterFurnace works continually to improve its products. As a result, the design and specifications of each product at the time of order may be changed without notice. Please contact WaterFurnace at 1-888-929-2837 for latest design and specifications. Purchaser's approval of this data set signifies that the equipment is acceptable under the provisions of the job specification. Statements and other information contained herein are not express warranties and do not form the basis of any bargain between the parties, but are merely WaterFurnace's opinion or commendation of its products. The latest version of this document is available at www.waterfurnace.com.

Wiring Schematics

Aurora Advanced with ECM and IntelliStart

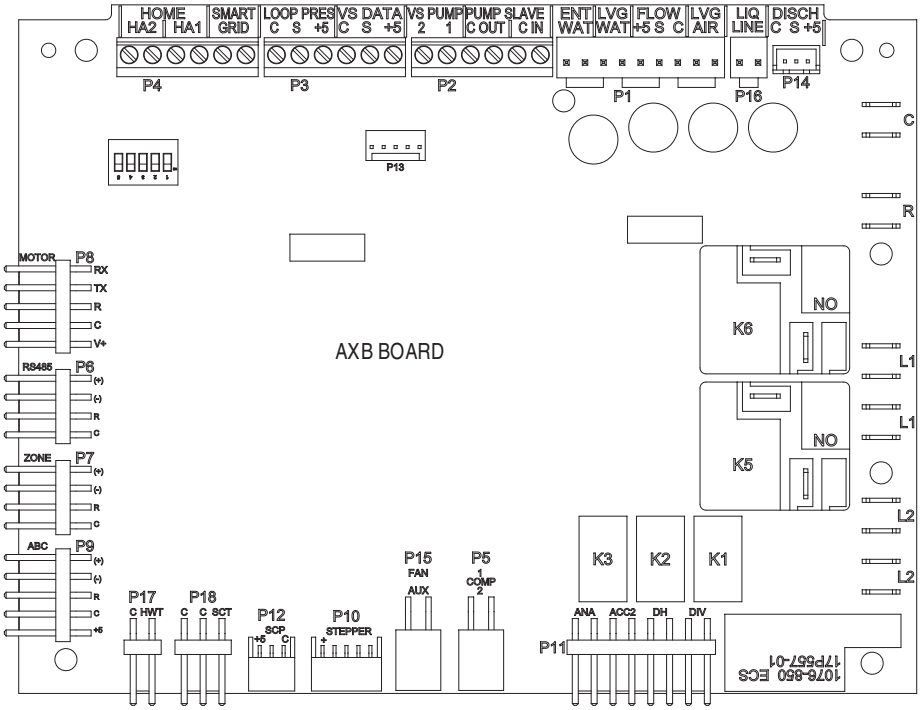

Aurora LED Flash Codes			
Slow Flash	1 second on and 1 second off		
Fast Flash	100 milliseconds on and 100 milliseconds off		
Flash Code	100 milliseconds on and 400 milliseconds off with a 2 second pause before repeating		
Fault LED (LED 1, Red)		**Random Start Delay (Alternating Colors)**	
Normal Mode	OFF	Status LED (LED1, Green)	Fast Flash
Input Fault Lockout	Flash Code 1	Configuration LED (LED 2, Yellow)	Fast Flash
High Pressure Lockout	Flash Code 2	Fault LED (LED 3, Red)	Fast Flash
Low Pressure Lockout	Flash Code 3	**Configuration LED (LED 2, Yellow)**	
Freeze Detection - FP2	Flash Code 4	No Software Overide	OFF
Freeze Detection - FP1	Flash Code 5	DIP Switch Overide	Slow Flash
Reserved	Flash Code 6	**Status LED (LED 3, Green)**	
Condensate Overflow Lockout	Flash Code 7	Normal Mode	ON
Over/Under Voltage Shutdown	Flash Code 8	Control is Non - Functional	OFF
Future Use	Flash Code 9	Test Mode	Slow Flash
Compressor Monitoring	Flash Code 10	Lockout Active	Fast Flash
Fault- FP1 Sensor Error	Flash Code 11	Dehumidification Mode	Flash Code 2
Future Use	Flash Code 12	Future Use	Flash Code 3
Non-Critical AXB Sensor Error	Flash Code 13	Future Use	Flash Code 4
Critical AXB Sensor Error	Flash Code 14	Load Shed	Flash Code 5
Alarm - Hot Water	Flash Code 15	ESD	Flash Code 6
Fault Variable Speed Pump	Flash Code 16	Future Use	Flash Code 7
Future Use	Flash Code 17	**Fault LED (LED 1, Red) Cont.**	
Non-Critical Communication Error	Flash Code 18	Alarm - Home Automation 1	Flash Code 23
Fault - Critical Communication Error	Flash Code 19	Alarm - Home Automation 2	Flash Code 24
Alarm - Low Loop Pressure	Flash Code 21	Fault - EEV Error	Flash Code 25
Fault - Communication ECM Fan Motor Error	Flash Code 22		

WaterFurnace works continually to improve its products. As a result, the design and specifications of each product at the time of order may be changed without notice. Please contact WaterFurnace at 1-888-929-2837 for latest design and specifications. Purchaser's approval of this data set signifies that the equipment is acceptable under the provisions of the job specification. Statements and other information contained herein are not express warranties and do not form the basis of any bargain between the parties, but are merely WaterFurnace's opinion or commendation of its products. The latest version of this document is available at www.waterfurnace.com.

Wiring Schematics cont.

Aurora Advanced with ECM and IntelliStart cont.

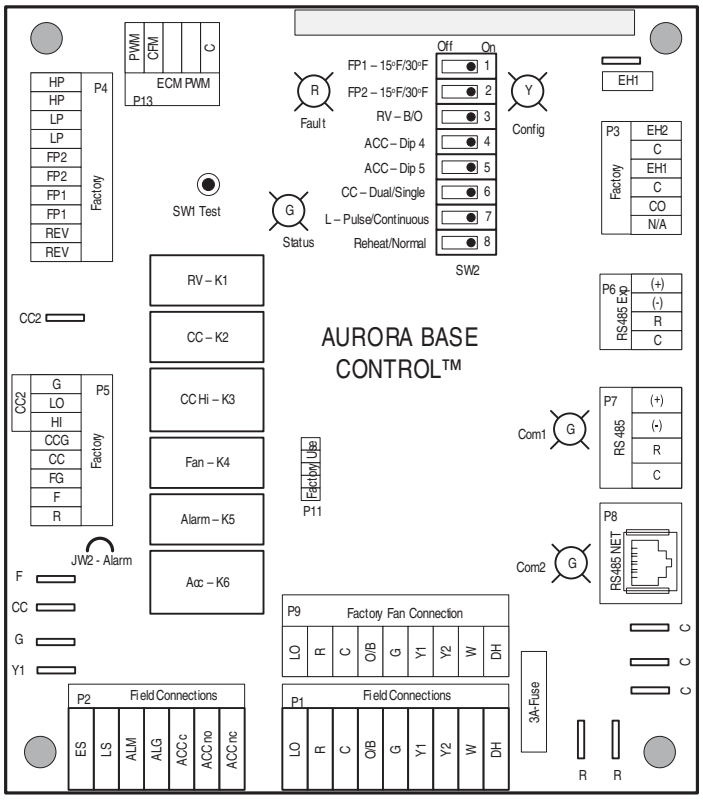

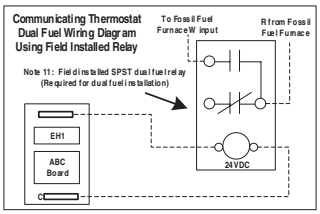

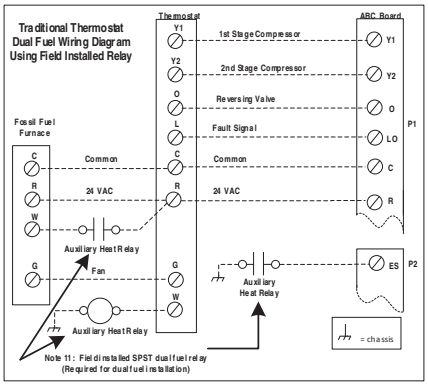

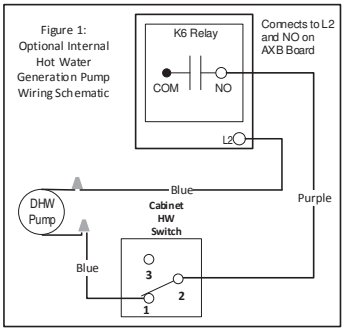

AXB Accessory 2 DIP Settings		
SW1-4	**SW1-5**	**DESCRIPTION**
ON	ON	Cycles with Blower
OFF	ON	Cycles with CC first stage compressor or compressor spd 1-12
ON	OFF	Cycles with CC2 second stage of compressor or comp spd 7-12
OFF	OFF	Cycles with DH from ABC board

ABC SW2 Accessory Relay		
DESCRIPTION	**SW2-4**	**SW2-5**
Cycle with Blower	ON	ON
Cycle with Compressor	OFF	OFF
Water Valve Slow Opening	ON	OFF
Cycle with Comm. T-stat Hum Cmd	OFF	ON

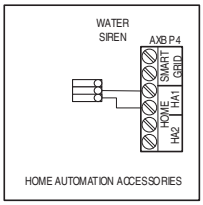

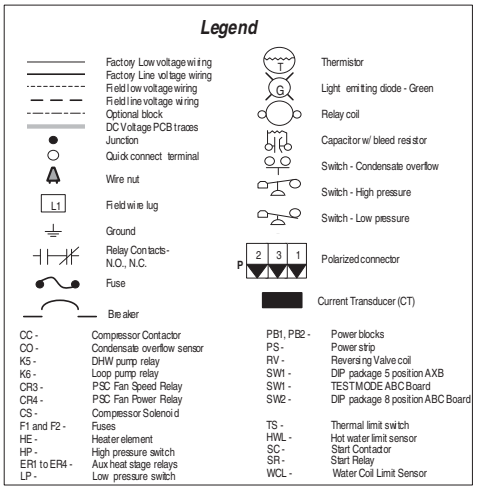

WaterFurnace works continually to improve its products. As a result, the design and specifications of each product at the time of order may be changed without notice. Please contact WaterFurnace at 1-888-929-2837 for latest design and specifications. Purchaser's approval of this data set signifies that the equipment is acceptable under the provisions of the job specification. Statements and other information contained herein are not express warranties and do not form the basis of any bargain between the parties, but are merely WaterFurnace's opinion or commendation of its products. The latest version of this document is available at www.waterfurnace.com.

Wiring Schematics cont.

Aurora Advanced with 5-Speed ECM

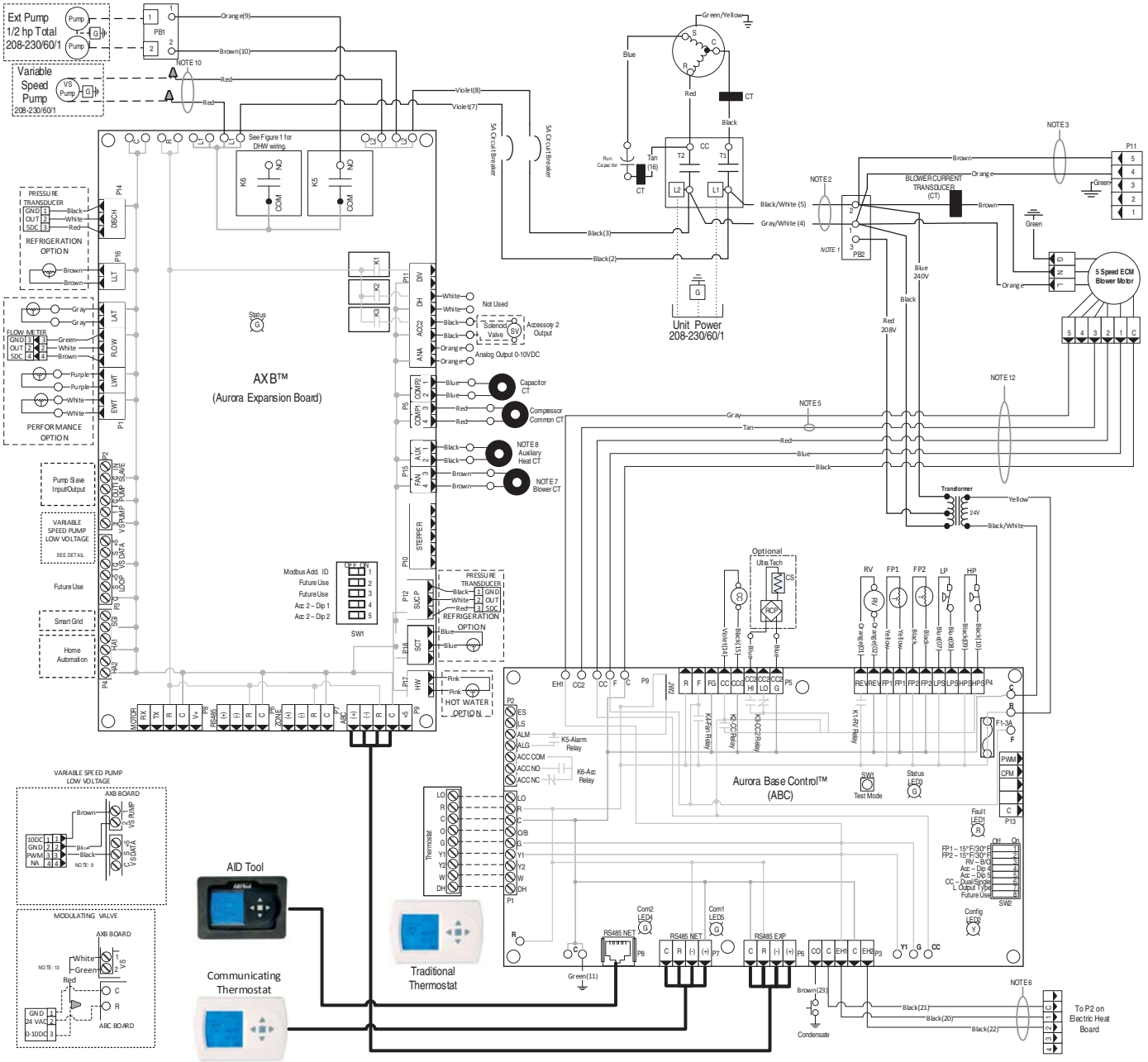

WaterFurnace works continually to improve its products. As a result, the design and specifications of each product at the time of order may be changed without notice. Please contact WaterFurnace at 1-888-929-2837 for latest design and specifications. Purchaser's approval of this data set signifies that the equipment is acceptable under the provisions of the job specification. Statements and other information contained herein are not express warranties and do not form the basis of any bargain between the parties, but are merely WaterFurnace's opinion or commendation of its products. The latest version of this document is available at www.waterfurnace.com.

Wiring Schematics cont.

Aurora Advanced with 5-Speed ECM cont.

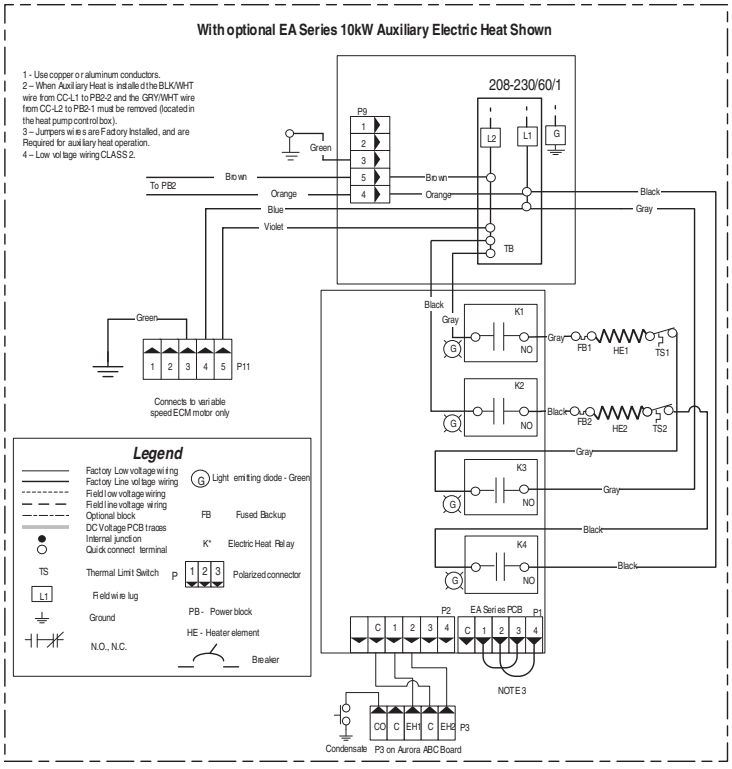

Notes

1 - Switch blue and red wires for 208V operation.
2 - The blk/wh and gray/wh wires are removed when Aux Heat is installed
3 – When Auxiliary Heat is field installed the harness will be connected to the auxiliary heat unit. The auxiliary heat unit will then power the blower. Refer to EAS/EAM/EAL Auxiliary Heat kit installation instructions. Wires are secured at blower
4 – Low voltage wiring CLASS 2.
5 - Y2 input wire Tan not connected on Single Speed units. Wire is secured at blower.
6 - Wires provided for Auxiliary Heat low voltage control. Wires are secured at blower.
7 – Brown blower power wire routed through Current Transducer two times.
8 – Field Connected: Refer to Installation Manual and Auxiliary Heat Instructions for Current Transducer installation.
9 – Variable speed pump low voltage harness provided with Variable Speed Flow Center.
10 – Variable speed pump power wires to connect the pump to L1 and L2 on the AXB board are provided with Variable Speed Flow Center.
11 - Field installed SPST relay required for dual fuel installation.
12 - Refer to units 5 SPEED ECM MOTOR LOW VOLTAGE CONNECTION table for factory settings.
13 - Wiring harness supplied with valve.

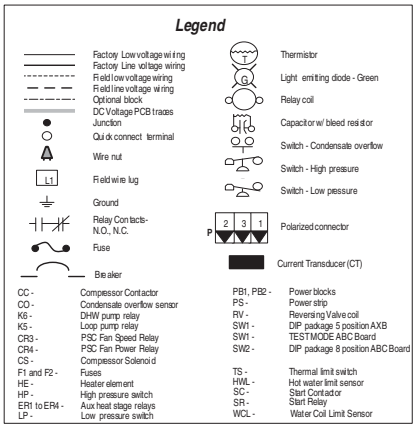

WaterFurnace works continually to improve its products. As a result, the design and specifications of each product at the time of order may be changed without notice. Please contact WaterFurnace at 1-888-929-2837 for latest design and specifications. Purchaser's approval of this data set signifies that the equipment is acceptable under the provisions of the job specification. Statements and other information contained herein are not express warranties and do not form the basis of any bargain between the parties, but are merely WaterFurnace's opinion or commendation of its products. The latest version of this document is available at www.waterfurnace.com.

Wiring Schematics cont.

Aurora Advanced with 5-Speed ECM

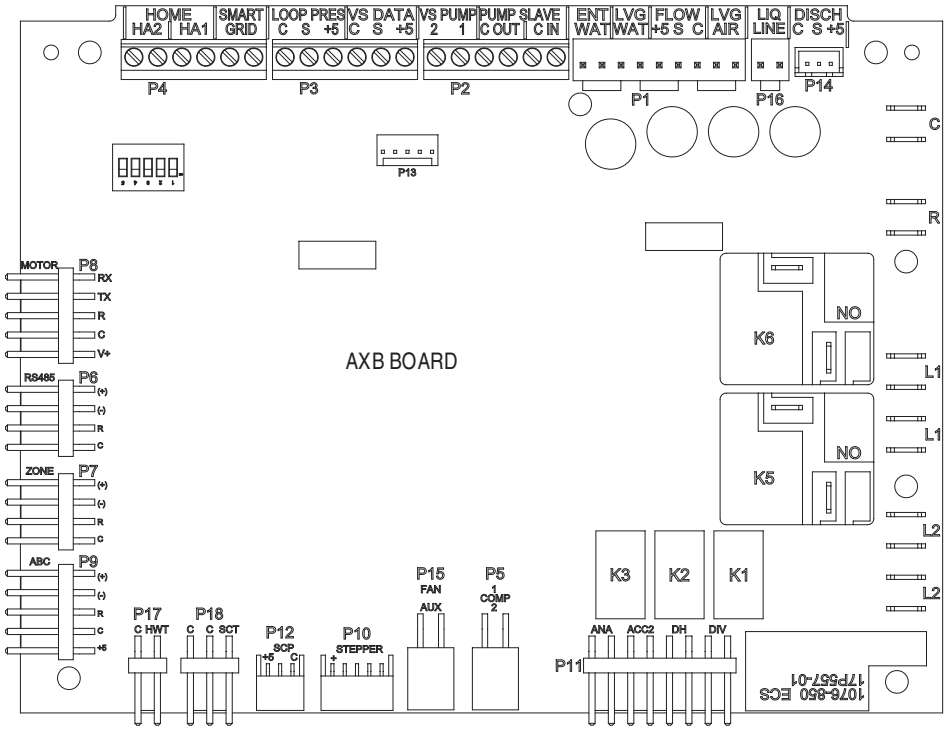

Aurora LED Flash Codes			
Slow Flash	1 second on and 1 second off		
Fast Flash	100 milliseconds on and 100 milliseconds off		
Flash Code	100 milliseconds on and 400 milliseconds off with a 2 second pause before repeating		
Fault LED (LED 1, Red)		**Random Start Delay (Alternating Colors)**	
Normal Mode	OFF	Status LED (LED1, Green)	Fast Flash
Input Fault Lockout	Flash Code 1	Configuration LED (LED 2, Yellow)	Fast Flash
High Pressure Lockout	Flash Code 2	Fault LED (LED 3, Red)	Fast Flash
Low Pressure Lockout	Flash Code 3	**Configuration LED (LED 2, Yellow)**	
Freeze Detection - FP2	Flash Code 4	No Software Overide	OFF
Freeze Detection - FP1	Flash Code 5	DIP Switch Overide	Slow Flash
Reserved	Flash Code 6	**Status LED (LED 3, Green)**	
Condensate Overflow Lockout	Flash Code 7	Normal Mode	ON
Over/Under Voltage Shutdown	Flash Code 8	Control is Non - Functional	OFF
Future Use	Flash Code 9	Test Mode	Slow Flash
Compressor Monitoring	Flash Code 10	Lockout Active	Fast Flash
Fault- FP1 Sensor Error	Flash Code 11	Dehumidification Mode	Flash Code 2
Future Use	Flash Code 12	Future Use	Flash Code 3
Non-Critical AXB Sensor Error	Flash Code 13	Future Use	Flash Code 4
Critical AXB Sensor Error	Flash Code 14	Load Shed	Flash Code 5
Alarm - Hot Water	Flash Code 15	ESD	Flash Code 6
Fault Variable Speed Pump	Flash Code 16	Future Use	Flash Code 7
Future Use	Flash Code 17	**Fault LED (LED 1, Red) Cont.**	
Non-Critical Communication Error	Flash Code 18	Alarm - Home Automation 1	Flash Code 23
Fault - Critical Communication Error	Flash Code 19	Alarm - Home Automation 2	Flash Code 24
Alarm - Low Loop Pressure	Flash Code 21	Fault - EEV Error	Flash Code 25
Fault - Communication ECM Fan Motor Error	Flash Code 22		

5 SPEED ECM MOTOR LOW VOLTAGE CONNECTIONS SINGLE SPEED					
Model	**TAP-1**	**TAP-2**	**TAP-3**	**TAP-4**	**TAP-5**
22		BLUE		RED	GRAY
30	BLUE		RED	GRAY	
36	BLUE			RED	GRAY
42	BLUE	RED		GRAY	
48	BLUE		RED	GRAY	
60	BLUE			RED	GRAY
70	BLUE			RED	GRAY
5 SPEED ECM MOTOR LOW VOLTAGE CONNECTIONS DUAL CAPACITY					
Model	**TAP-1**	**TAP-2**	**TAP-3**	**TAP-4**	**TAP-5**
26	BLUE	RED		TAN	GRAY
38	BLUE		RED	TAN	GRAY
49	BLUE	RED	TAN		GRAY
64	BLUE	RED		TAN	GRAY
72	BLUE	RED		TAN	GRAY

WaterFurnace works continually to improve its products. As a result, the design and specifications of each product at the time of order may be changed without notice. Please contact WaterFurnace at 1-888-929-2837 for latest design and specifications. Purchaser's approval of this data set signifies that the equipment is acceptable under the provisions of the job specification. Statements and other information contained herein are not express warranties and do not form the basis of any bargain between the parties, but are merely WaterFurnace's opinion or commendation of its products. The latest version of this document is available at www.waterfurnace.com.

Wiring Schematics cont.

Aurora Advanced with 5-Speed ECM cont.

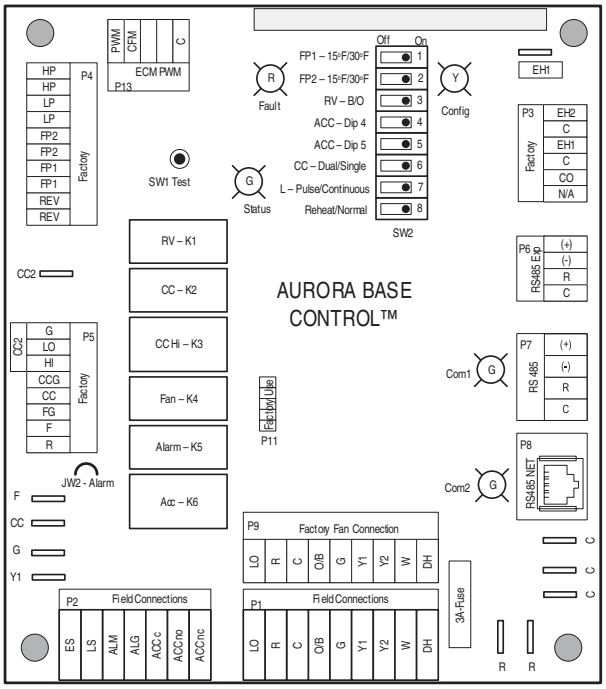

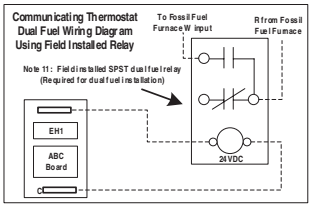

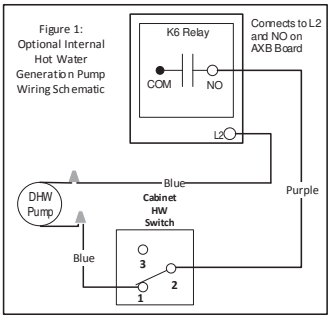

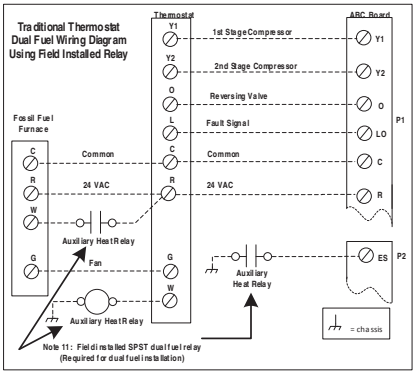

AXB Accessory 2 DIP Settings		
SW1-4	**SW1-5**	**DESCRIPTION**
ON	ON	Cycles with Blower
OFF	ON	Cycles with CC first stage compressor or compressor spd 1-12
ON	OFF	Cycles with CC2 second stage of compressor or comp spd 7-12
OFF	OFF	Cycles with DH from ABC board

ABC SW2 Accessory Relay		
DESCRIPTION	**SW2-4**	**SW2-5**
Cycle with Blower	ON	ON
Cycle with Compressor	OFF	OFF
Water Valve Slow Opening	ON	OFF
Cycle with Comm. T-stat Hum Cmd	OFF	ON

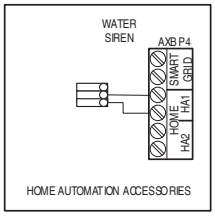

WaterFurnace works continually to improve its products. As a result, the design and specifications of each product at the time of order may be changed without notice. Please contact WaterFurnace at 1-888-929-2837 for latest design and specifications. Purchaser's approval of this data set signifies that the equipment is acceptable under the provisions of the job specification. Statements and other information contained herein are not express warranties and do not form the basis of any bargain between the parties, but are merely WaterFurnace's opinion or commendation of its products. The latest version of this document is available at www.waterfurnace.com.

Wiring Schematics cont.

Aurora Base with PSC

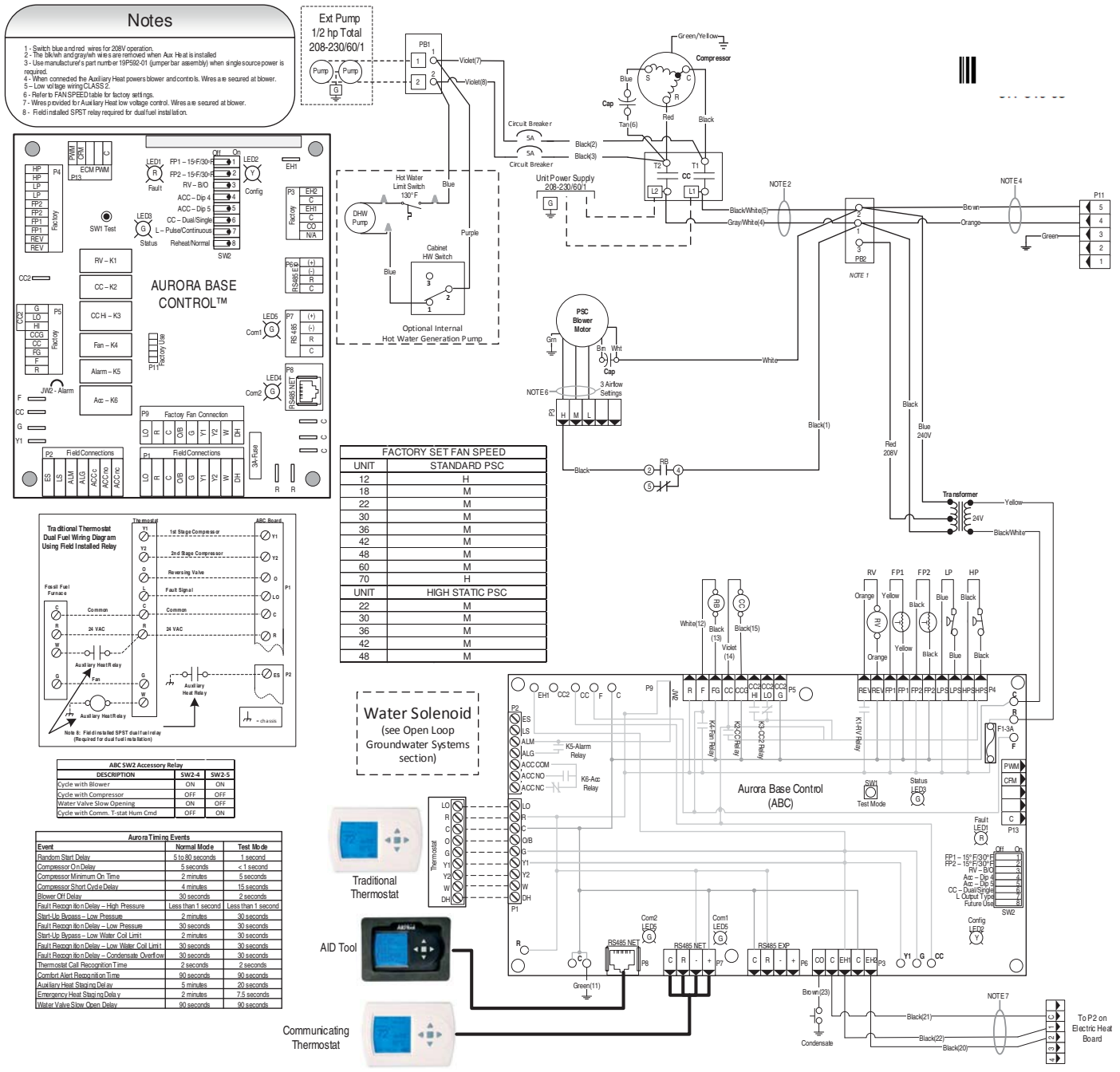

FACTORY SET FAN SPEED	
UNIT	STANDARD PSC
12	H
18	M
22	M
30	M
36	M
42	M
48	M
60	M
70	H
UNIT	HIGH STATIC PSC
22	M
30	M
36	M
42	M
48	M

ABC SW2 Accessory Relay		
DESCRIPTION	SW2-4	SW2-5
Cycle with Blower	ON	ON
Cycle with Compressor	OFF	OFF
Water Valve Slow Opening	ON	OFF
Cycle with Comm. T-stat Hum Cmd	OFF	ON

Aurora Timing Events		
Event	Normal Mode	Test Mode
Random Start Delay	5 to 80 seconds	1 second
Compressor On Delay	5 seconds	< 1 second
Compressor Minimum On Time	2 minutes	5 seconds
Compressor Short Cycle Delay	4 minutes	15 seconds
Blower Off Delay	30 seconds	2 seconds
Fault Recognition Delay – High Pressure	Less than 1 second	Less than 1 second
Start-Up Bypass – Low Pressure	2 minutes	30 seconds
Fault Recognition Delay – Low Pressure	30 seconds	30 seconds
Start-Up Bypass – Low Water Coil Limit	2 minutes	30 seconds
Fault Recognition Delay – Low Water Coil Limit	30 seconds	30 seconds
Fault Recognition Delay – Condensate Overflow	30 seconds	30 seconds
Thermostat Call Recognition Time	2 seconds	2 seconds
Comfort Alert Recognition Time	90 seconds	90 seconds
Auxiliary Heat Staging Delay	5 minutes	20 seconds
Emergency Heat Staging Delay	2 minutes	7.5 seconds
Water Valve Slow Open Delay	90 seconds	90 seconds

WaterFurnace works continually to improve its products. As a result, the design and specifications of each product at the time of order may be changed without notice. Please contact WaterFurnace at 1-888-929-2837 for latest design and specifications. Purchaser's approval of this data set signifies that the equipment is acceptable under the provisions of the job specification. Statements and other information contained herein are not express warranties and do not form the basis of any bargain between the parties, but are merely WaterFurnace's opinion or commendation of its products. The latest version of this document is available at www.waterfurnace.com.

Wiring Schematics cont.

Aurora Base with PSC cont.

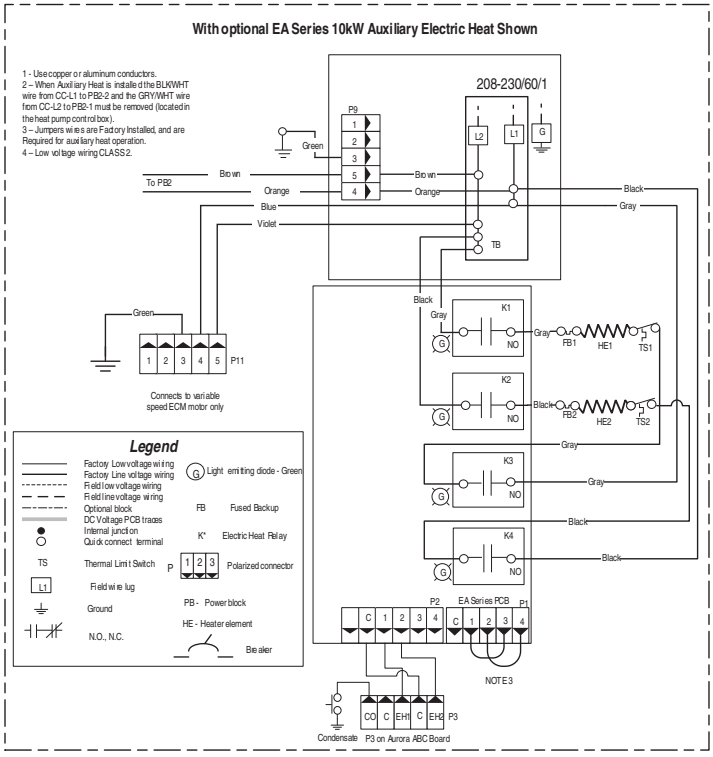

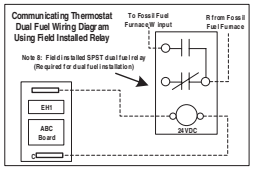

Aurora LED Flash Codes			
Slow Flash	1 second on and 1 second off		
Fast Flash	100 milliseconds on and 100 milliseconds off		
Flash Code	100 milliseconds on and 400 milliseconds off with a 2 second pause before repeating		
Random Start Delay (Alternating Colors)		**Configuration LED (LED2, Yellow)**	
Status LED (LED1, Green)	Fast Flash	No Software Override	OFF
Configuration LED (LED2, Yellow)	Fast Flash	DIP Switch Override	Slow Flash
Fault LED (LED3, Red)	Fast Flash		
Fault LED (LED1, Red)		**Status LED (LED3, Green)**	
Normal Mode	OFF	Normal Mode	ON
Input Fault Lockout	Flash Code 1	Control is Non-Functional	OFF
High Pressure Lockout	Flash Code 2	Test Mode	Slow Flash
Low Pressure Lockout	Flash Code 3	Lockout Active	Fast Flash
Future Use	Flash Code 4	Dehumidification Mode	Flash Code 2
Freeze Detection – FP1	Flash Code 5	Future Use	Flash Code 3
Reserved	Flash Code 6	Future Use	Flash Code 4
Condensate Overflow Lockout	Flash Code 7	Load Shed	Flash Code 5
Over/Under Voltage Shutdown	Flash Code 8	ESD	Flash Code 6
Future Use	Flash Code 9	Future Use	Flash Code 7
Future Use	Flash Code 10		
FP1 Sensor Error	Flash Code 11		

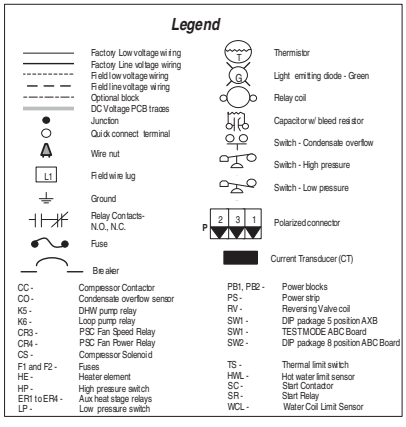

WaterFurnace works continually to improve its products. As a result, the design and specifications of each product at the time of order may be changed without notice. Please contact WaterFurnace at 1-888-929-2837 for latest design and specifications. Purchaser's approval of this data set signifies that the equipment is acceptable under the provisions of the job specification. Statements and other information contained herein are not express warranties and do not form the basis of any bargain between the parties, but are merely WaterFurnace's opinion or commendation of its products. The latest version of this document is available at www.waterfurnace.com.

Wiring Schematics cont.

Aurora Base with ECM, IntelliStart and UPC

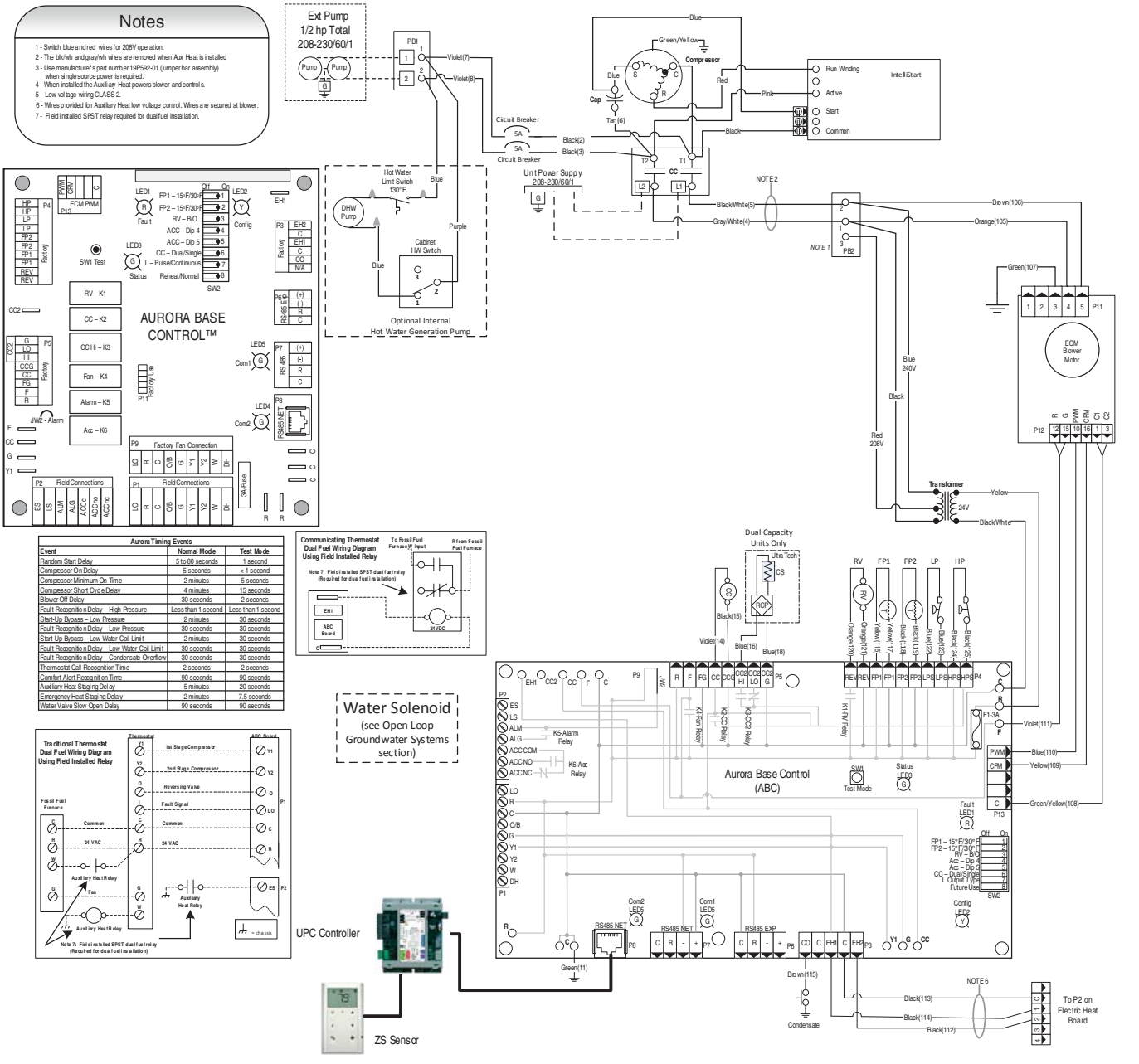

WaterFurnace works continually to improve its products. As a result, the design and specifications of each product at the time of order may be changed without notice. Please contact WaterFurnace at 1-888-929-2837 for latest design and specifications. Purchaser's approval of this data set signifies that the equipment is acceptable under the provisions of the job specification. Statements and other information contained herein are not express warranties and do not form the basis of any bargain between the parties, but are merely WaterFurnace's opinion or commendation of its products. The latest version of this document is available at www.waterfurnace.com.

Wiring Schematics cont.

Aurora Base with ECM, IntelliStart and UPC cont.

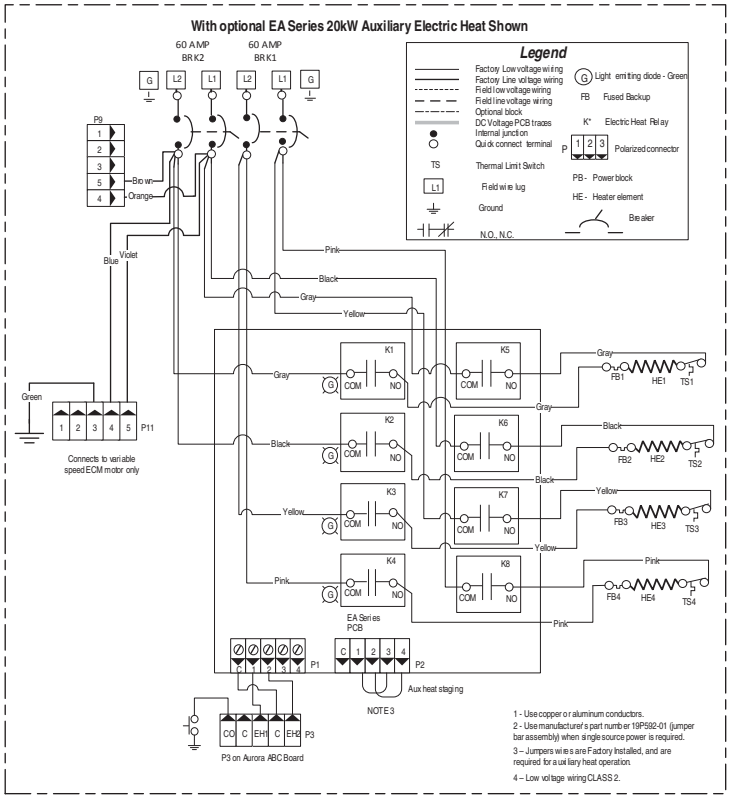

ABC SW2 Accessory Relay		
DESCRIPTION	SW2-4	SW2-5
Cycle with Blower	ON	ON
Cycle with Compressor	OFF	OFF
Water Valve Slow Opening	ON	OFF
Cycle with Comm. T-stat Hum Cmd	OFF	ON

Aurora LED Flash Codes			
Slow Flash	1 second on and 1 second off		
Fast Flash	100 milliseconds on and 100 milliseconds off		
Flash Code	100 milliseconds on and 400 milliseconds off with a 2 second pause before repeating		
Random Start Delay (Alternating Colors)		Configuration LED (LED2, Yellow)	
Status LED (LED1, Green)	Fast Flash	No Software Override	OFF
Configuration LED (LED2, Yellow)	Fast Flash	DIP Switch Override	Slow Flash
Fault LED (LED3, Red)	Fast Flash		
Fault LED (LED1, Red)		Status LED (LED3, Green)	
Normal Mode	OFF	Normal Mode	ON
Input Fault Lockout	Flash Code 1	Control is Non-Functional	OFF
High Pressure Lockout	Flash Code 2	Test Mode	Slow Flash
Low Pressure Lockout	Flash Code 3	Lockout Active	Fast Flash
Future Use	Flash Code 4	Dehumidification Mode	Flash Code 2
Freeze Detection – FP1	Flash Code 5	Future Use	Flash Code 3
Reserved	Flash Code 6	Future Use	Flash Code 4
Condensate Overflow Lockout	Flash Code 7	Load Shed	Flash Code 5
Over/Under Voltage Shutdown	Flash Code 8	ESD	Flash Code 6
Future Use	Flash Code 9	Future Use	Flash Code 7
Future Use	Flash Code 10		
FP1 Sensor Error	Flash Code 11		

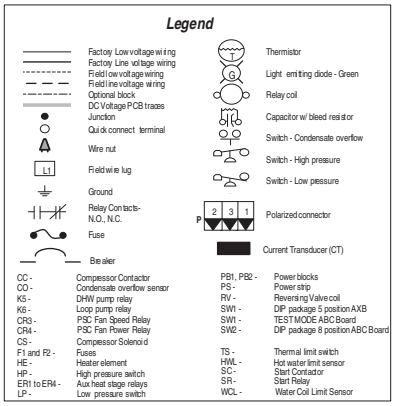

WaterFurnace works continually to improve its products. As a result, the design and specifications of each product at the time of order may be changed without notice. Please contact WaterFurnace at 1-888-929-2837 for latest design and specifications. Purchaser's approval of this data set signifies that the equipment is acceptable under the provisions of the job specification. Statements and other information contained herein are not express warranties and do not form the basis of any bargain between the parties, but are merely WaterFurnace's opinion or commendation of its products. The latest version of this document is available at www.waterfurnace.com.

Wiring Schematics cont.

Aurora UPC

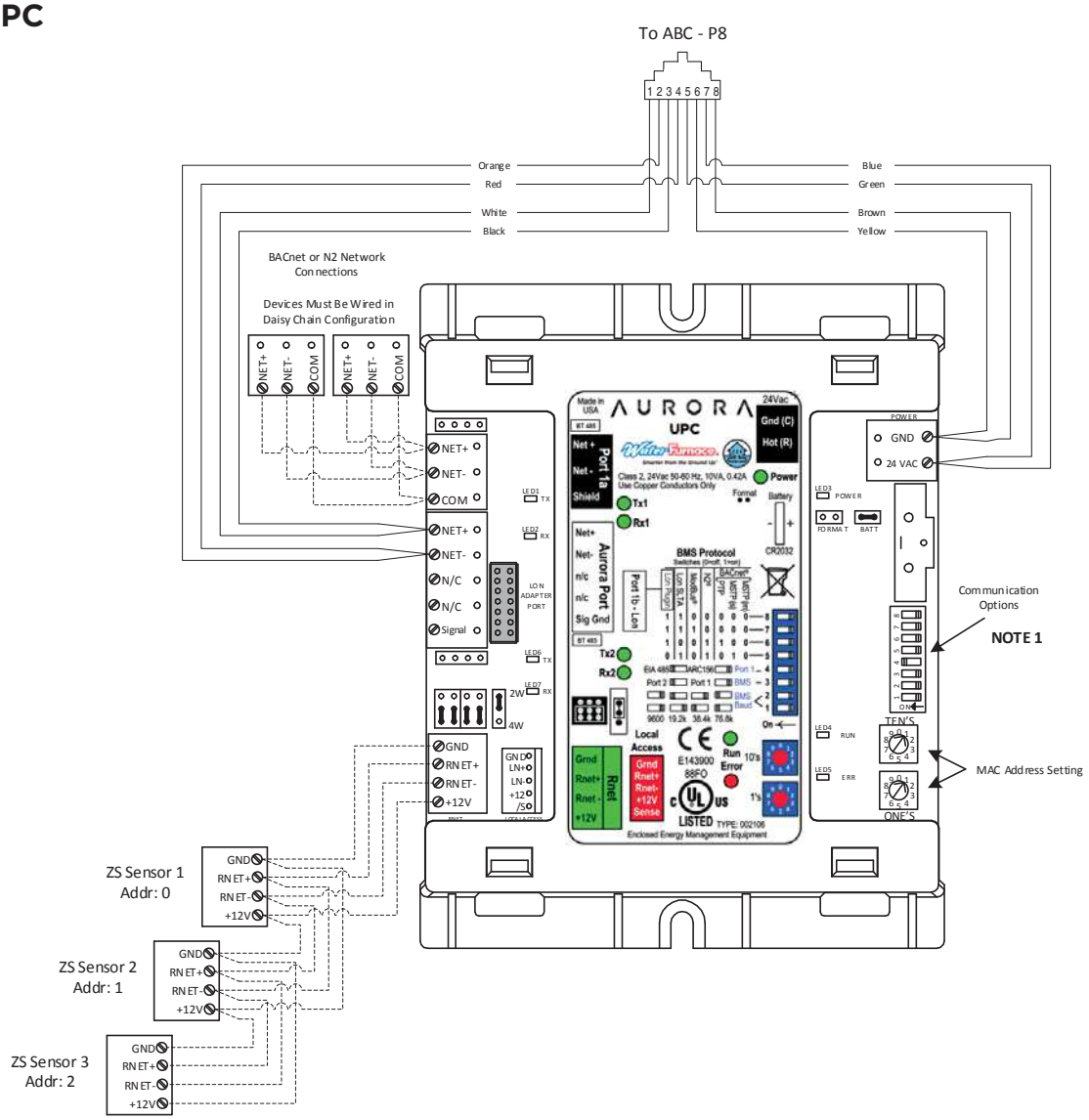

ZS Sensor Information

Zone Sensors can be wired in daisy chain as shown or in a star or hybrid configuration. Maximum of 5 sensors per UPC. Maximum allowable load 210mA. See the UPC install manual for possible sensor combinations.

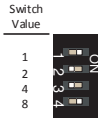

Each ZS sensor must have a unique address, but the addresses do not need to be sequential. Use the DIP switches on the back of the ZS sensor to set an address from 0 to 4. (0 is the factory default.) Each DIP switch has the value shown in the figure to the left. Turn on as many DIP switches as you need so that their total value equals the address.

Notes

1. Use DIP Switches 5 – 8 to change communication protocol and DIP switches 1 – 2 to change BACnet baud rate. DIP switches factory set for BACnet MSTP (s)

Legend

- Factory Low Voltage Wiring
- Field Low Voltage Wiring
- RJ45 Connector

WaterFurnace works continually to improve its products. As a result, the design and specifications of each product at the time of order may be changed without notice. Please contact WaterFurnace at 1-888-929-2837 for latest design and specifications. Purchaser's approval of this data set signifies that the equipment is acceptable under the provisions of the job specification. Statements and other information contained herein are not express warranties and do not form the basis of any bargain between the parties, but are merely WaterFurnace's opinion or commendation of its products. The latest version of this document is available at www.waterfurnace.com.

Contractor: _____ P.O.: _____

Engineer: _____

Project Name: _____ Unit Tag: _____

Engineering Guide Specifications

General

Furnish and install WaterFurnace Water Source Heat Pumps, as indicated on the plans. Equipment shall be completely assembled, piped and internally wired. Capacities and characteristics as listed in the schedule and the specifications that follow. The reverse cycle heating/cooling units shall be either suspended type with horizontal air inlet and discharge or floor mounted type with horizontal air inlet and vertical upflow, downflow, or rear air discharge. Units shall be AHRI/ISO 13256-1 certified and listed by a nationally recognized safety-testing laboratory or agency, such as ETL Testing Laboratory. Each unit shall be computer run-tested at the factory with conditioned water and operation verified to catalog data. Each unit shall be mounted on a pallet and shipped in a corrugated box or stretch-wrapped. The units shall be designed to operate with entering liquid temperature between 20°F and 120°F [-6.7°C and 48.9°C].

Casing and Cabinet

The cabinet shall be fabricated from heavy-gauge galvanized steel and finished with corrosion-resistant powder coating. This corrosion protection system shall meet the stringent 1000 hour salt spray test per ASTM B117. The interior shall be insulated with 1/2-inch thick, multi-density, cleanable aluminum foil coated glass fiber with edges sealed or tucked under flanges to prevent the introduction of glass fibers into the discharge air. Standard cabinet panel insulation must meet NFPA 90A requirements, air erosion and mold growth limits of UL-181, stringent fungal resistance test per ASTM-C1071 and ASTM G21, and shall meet zero level bacteria growth per ASTM G22. Unit insulation must meet these stringent requirements or unit(s) will not be accepted.

One (horizontal) to two (vertical) blower and three compressor compartment access panels shall be 'lift-out' removable with supply and return ductwork in place. The front access panel shall be lift-out to provide easy access to the electrical/compressor section. The control box shall be hinged and removable to allow easy access to the compressor. The internal component layout shall provide for service access from the front side for restricted installations.

A duct collar shall be provided on the supply air opening. Standard size 2 in. [5.1 cm] MERV 11 pleated filters shall be provided with each unit. Vertical units shall have a return air filter rack/duct collar; the horizontal units shall have a filter bracket each field convertible from 2 in. [5.1 cm] to 1 in. [2.5 cm]. The upflow vertical (022-072) units shall have a removable insulated divider panel between the air handling section and the compressor section to minimize the transmission of compressor noise and to permit operational service testing without air bypass. Vertical units shall be supplied with left or right horizontal air inlet and top, bottom (022-072), or rear vertical (042-072) air discharge. Horizontal units shall be supplied with left or right air inlet and side or end air discharge.

The compressor shall be double isolation mounted using selected durometer grommets to provide vibration free compressor mounting.

The drain pan shall be of plastic construction to inhibit corrosion and bacterial growth. Drain outlet shall be located on pan as to allow complete and unobstructed drainage of condensate. The unit as standard will be supplied with solid-state electronic condensate overflow protection. Mechanical float switches WILL NOT be accepted. Vertical units shall be furnished with a PVC slip condensate drain connection and an internal factory installed condensate trap.

Refrigerant Circuit

All units shall contain a sealed refrigerant circuit including a hermetic motor-compressor, discharge line muffler (022-072), bidirectional thermostatic expansion valve, finned tube air-to-refrigerant heat exchanger, reversing valve, coaxial tube water-to-refrigerant heat exchanger, optional hot water generator coil (018-072), and service ports.

Compressors shall be high-efficiency single speed rotary or scroll, or dual capacity scroll type designed for heat pump duty and mounted on vibration isolators. Compressor motors shall be single-phase PSC with overload protection. The finned tube air-to-refrigerant heat exchanger will be aluminum tube/fin or copper tube/aluminum fin and shall be sized for low-face velocity and constructed of lanced aluminum fins bonded to performance enhanced tubes in a staggered pattern not less than three rows deep for superior performance. The aluminum tube and fin air-to-refrigerant heat exchanger has as optional to be double electro-coated with AlumiSeal. The copper tube aluminum fin air-to-refrigerant heat exchanger will be constructed of patented 11 element fin and electro-coated for corrosion protection. Models 022-072 shall include discharge mufflers to help quiet compressor discharge gas pulsations. Refrigerant to air heat exchangers shall utilize enhanced tube construction rated to withstand 600 psig (4135 kPa) refrigerant working pressure.

The coaxial water-to-refrigerant heat exchanger shall be designed for low water pressure drop and constructed of a convoluted copper (cupronickel option) inner tube and a steel outer tube. Refrigerant to water heat exchangers shall be of copper inner water tube and steel refrigerant outer tube design, rated to withstand 600 psig (4135 kPa) working refrigerant pressure and 450 psig (3101 kPa) working water pressure. The thermostatic expansion valve shall provide proper superheat over the entire liquid temperature range with minimal "hunting." The valve shall operate bidirectionally without the use of check valves.

All units shall have the source coaxial tube refrigerant-to-water heat exchanger and the optional hot water generator coil shall be coated with ThermaShield. Refrigerant suction lines shall be insulated to prevent condensation at low liquid temperatures.

WaterFurnace works continually to improve its products. As a result, the design and specifications of each product at the time of order may be changed without notice. Please contact WaterFurnace at 1-888-929-2837 for latest design and specifications. Purchaser's approval of this data set signifies that the equipment is acceptable under the provisions of the job specification. Statements and other information contained herein are not express warranties and do not form the basis of any bargain between the parties, but are merely WaterFurnace's opinion or commendation of its products. The latest version of this document is available at www.waterfurnace.com.

Engineering Guide Specifications cont.

Blower Motor and Assembly

The blower shall be a direct drive centrifugal type with a dynamically balanced wheel. The housing and wheel shall be designed for quiet low outlet velocity operation. The blower housing shall be removable from the unit without disconnecting the supply air ductwork for servicing of the blower motor. The blower motor shall be a 3-speed PSC, 5-speed ECM, or variable-speed ECM type. The Variable Speed ECM blower motor shall be soft starting, shall maintain constant cfm over its operating static range, and shall provide 12 cfm settings. An optional constant torque 5-speed ECM is available on model sizes 022-072. An optional 3-speed PSC blower motor is available on all single speed models. The blower motor shall be isolated from the housing by rubber grommets. The motor shall be permanently lubricated and have thermostatic overload protection. Variable Speed ECM and 5-speed ECM motors shall be long-life ball bearing type.

Electrical

A control box shall be located within the unit compressor compartment and shall contain a 75VA transformer, 24 volt activated, 2 pole compressor contactor, circuit breakers for protecting loop pumps, terminal block for thermostat wiring, and solid-state controller for complete unit operation. Electromechanical operation WILL NOT be accepted. Units shall be name-plated for use with time delay fuses or HACR circuit breakers. Unit controls shall be 24 volt and provide heating or cooling as required by the remote thermostat/sensor. An Aurora, a microprocessor-based controller, interfaces with a multi-stage electronic thermostat to monitor and control unit operation shall be provided. The control shall provide operational sequencing, blower speed control, blower failure, high and low pressure switch monitoring, freeze detection, hot water limit thermistor sensing, condensate overflow sensing, auxiliary heat staging, lockout mode control, hot water and loop pump control, LED status and fault indicators, fault memory, field selectable options, and accessory output. The Lockout signal output shall have a pulsed option so that DDC systems can read specific lockout conditions from the control.

The optional Aurora Advanced Control shall also feature an Energy Monitoring Package that will provide real time total power consumption, compressor monitoring, On Peak input signal for utility controlled demand programs, intelligent hot water generation with user adjustable temperature limit, loop pump linking for multiple units driving a common flow center and up to two optional home automation inputs to drive dedicated alarms for sump pump, security system, and smoke/CO_2 or dirty air filter sensors. Optional Refrigerant and Performance Monitoring kits to provide real time data including refrigerant superheat and subcooling, as well as heat of extraction/rejection capacity data. The capability for communicating to advanced IntelliZone2 zoning packages with up to 6 zones (Variable Speed), 4 zones (Dual Capacity), or 2 zones (Single Speed) shall also be provided with complete fault and information display on the zoning MasterStat.

A detachable terminal block with screw terminals will be provided for field control wiring. All units shall have knockouts for entrance of low and line voltage wiring. The blower motor and control box shall be harness plug wired for easy removal.
An optional Aurora Interface Diagnostic (AID) Tool shall communicate with the Aurora control allowing quick and easy access to setup, monitoring, and troubleshooting of any Aurora control. The device shall include the features of ECM airflow setup, fault description and history, manual operation capability, sensor readings, timings, and other diagnostic tools.

Option: An Aurora Unitary Protocol Converter (UPC) shall be included that communicates directly with the Aurora Heat Pump Controls and allows access/control of a variety of internal Aurora heat pump operations such as sensors, relay operation, faults and other information. In turn, the UPC shall convert the internal Aurora Modbus protocol to to BACnet MS/TP protocol for communication over a HAS system. Additional individual unit configuration items such as ECM fan speeds or freeze protection settings shall be directly available over the HAS without the need for access to the actual heat pump. UPC is not compatible with Symphony or IntelliZone2.

Optional IntelliStart® (compressor Soft Starter) shall be factory installed for use in applications that require low starting amps, reduced compressor start-up noise, off-grid, and improved start-up behavior. IntelliStart shall reduce normal starting current by up to 60%.

Piping

Supply and return water connections shall be 1 in. [25.4 mm] FPT brass swivel fittings, which provide a union and eliminate the need for pipe wrenches and sealants when making field connections. The optional hot water generator shall have sweat type connections. All water piping shall be insulated to prevent condensation at low liquid temperatures, on the vertical units, the condensate connection shall be a 3/4 in. [19.1 mm] PVC socket with internally-trapped hose that can be routed to front or side locations.

Hanger Kit

(field-installed horizontal units only)

The hanger kit shall consist of galvanized steel brackets, bolts, lock washers, and isolators and shall be designed to fasten to the unit bottom panel for suspension from 3/8-inch threaded rods. Unit sizes 012-030 shall include four brackets. Unit sizes 036-072 shall include six brackets.

WaterFurnace works continually to improve its products. As a result, the design and specifications of each product at the time of order may be changed without notice. Please contact WaterFurnace at 1-888-929-2837 for latest design and specifications. Purchaser's approval of this data set signifies that the equipment is acceptable under the provisions of the job specification. Statements and other information contained herein are not express warranties and do not form the basis of any bargain between the parties, but are merely WaterFurnace's opinion or commendation of its products. The latest version of this document is available at www.waterfurnace.com.

Engineering Guide Specifications cont.

Options and Accessories

Cupronickel Heat Exchanger

An optional cupronickel water-to-refrigerant heat exchanger shall be provided.

Hot Water Generator

An optional ThermaShield coated heat reclaiming hot water generator coil of vented double-wall copper construction suitable for potable water shall be provided. The coil and hot water circulating pump shall be factory mounted inside the unit with integral electronic high limit temperature monitoring and external on/off switch.

5-Speed ECM Blower Motor

An optional constant torque 5-speed ECM blower motor is available on model sizes 022-072.

PSC Blower Motor

An optional 3-speed PSC blower motor is available on all single speed models.

Thermostat (field-installed)

A multi-stage auto-changeover electronic digital thermostat shall be provided. The thermostat shall offer three heating and two cooling stages with precise temperature control. An OFF-HEAT-AUTO-COOL-EMERG system switch, OFF-AUTO blower switch, and indicating LEDs shall be provided. The thermostat shall display in °F or °C. The thermostat shall be either a communicating type or a traditional 24 VAC type.

Communicating Thermostat (field-installed)

A communicating auto-changeover electronic digital thermostat shall be provided. The thermostat shall offer variable speed heating and cooling staging with precise temperature control. An OFF-HEAT-AUTO-COOL-EMERG system switch, OFF-AUTO blower switch, and indicating display shall be provided. The thermostat shall display in °F or °C. The thermostat shall provide real time energy consumption data of the unit.

Communicating Color Touchscreen Thermostat (field-installed)

A color touchscreen communicating auto-changeover electronic digital thermostat shall be provided. The thermostat shall offer variable speed heating and cooling staging with precise temperature control. An OFF-HEAT-AUTO-COOL-EMERG system switch, OFF-AUTO blower switch, and indicating display shall be provided. The thermostat shall display in °F or °C. The thermostat shall provide real time and historical energy consumption data of the unit.

Electronic Air Cleaner (field-installed)

A 1 in. [25 mm] electronic air cleaner, cleanable 97% efficiency at 0.3 microns and larger, shall be provided in lieu of the standard throwaway filter. The initial pressure drop across the filter shall not exceed 0.2 in. w.g. at 300 fpm force velocity.

Electrostatic Air Cleaner (field-installed)

A 1 in. [25 mm] electrostatic air cleaner, cleanable 90% efficiency, shall be provided in lieu of the standard throwaway filter. The initial pressure drop across the filter shall not exceed 0.15 in. w.g. at 300 fpm force velocity.

AlpinePure 411–Rack 4 in. Pleated Filter Accessory

A 4 in. [102 mm] thick MERV 11 filter and filter rack shall be provided in lieu of the standard filter and rack.

AlpinePure MERV 13 Filter

A 2 in. [50 mm] thick MERV 13 filter shall be provided in lieu of the standard filter and fits the factory filter rack. The filter maintains MERV 13 rating in full ASHRAE 52.2 independent testing as required for LEED® certification. Helps fulfill a full credit under the LEED rating system.

AlpinePure Drain Pan Treatment

Provides dependable, sustained time-release protection from slime build-up and foul smelling odors in the drain pan. Also adds a light, pleasant scent to the air.

Earth Loop Flow Center (field-installed)

A self-contained module shall provide all liquid flow, fill and connection requirements for ground source closed loop systems up to 20 gpm. The pumps shall be wired to a power block located in the nearest unit. The heat pump units shall contain low voltage pump linking control so that two units may share one flow center.

Auxiliary Heater (field-installed)

An electric resistance heater shall provide supplemental and/or emergency heating capability. Vertical units shall have the control panel and resistance heater coil assembly mounted internally. For horizontal units, the control panel shall be mounted internally while the resistance heater coil assembly shall be mounted externally. A low voltage plug shall be provided in each unit for quick auxiliary heat connection. The heater shall operate in sequenced stages as controlled by the unit's microprocessor. The heater shall feed line voltage power to the unit blower and transformer to provide emergency heat capability in the event of an open compressor circuit breaker.

WaterFurnace works continually to improve its products. As a result, the design and specifications of each product at the time of order may be changed without notice. Please contact WaterFurnace at 1-888-929-2837 for latest design and specifications. Purchaser's approval of this data set signifies that the equipment is acceptable under the provisions of the job specification. Statements and other information contained herein are not express warranties and do not form the basis of any bargain between the parties, but are merely WaterFurnace's opinion or commendation of its products. The latest version of this document is available at www.waterfurnace.com.

Engineering Guide Specifications cont.

Symphony/Aurora Weblink

Symphony is a Wi-Fi enabled smart comfort system for your geothermal heat pump that is unsurpassed in its ease of use, feature set and capability. Symphony marries the sophisticated Aurora controls of your WaterFurnace Geothermal System with a web enabled Aurora Weblink Router giving you access to your comfort geothermal heat pump from practically anywhere. Symphony is cloud-based and includes your whole geothermal system and isn't limited to just the thermostat as in other 'smart thermostat' systems. Symphony web-portal provides control over every aspect of your geothermal heat pump including:

- View your geothermal system's operation from anywhere. Great for vacation or second homes.
- Dashboard for quick review of operation, alerts and energy use (if installed).
- Smart Device capability
- Modify your zone temperature setpoints and programs remotely
- IntelliZone2 zoning system compatible to access up to 6 zone thermostats with variable speed, 4 zones with dual capacity, and 2 zones with single speed geothermal heat pumps.
- Observe and track WaterFurnace energy use for the last 13 months (if installed).
- Receive equipment alerts and service reminders (as well as your dealer) via email and texts
- Monitor earth loop and air temperature of your geothermal heat pump directly (if installed).
- Utilize a 'wireless' thermostat system with no visible thermostats using a smart device. By mounting a communicating thermostat in a closet with external mud-in sensor located in the living space, a smart device can be used as a wireless thermostat for the ultimate in flexibility (TPCC32U01, TPCM32U03A, TPCM32U04A, or MasterStat only)
- Optional Add-on sensor for sump pump alarm. If a sump pump overflows you will receive a text or email.

External Sump Alarm Sensors for Aurora Controls

The sensor can be added to any Aurora Advanced Control System (including both ABC and AXB) to monitor a sump pump. The sensor can be connected to the Aurora Home Automation inputs (HA-1 or HA-2) of the AXB board. These will each display an E23 and E24 code respectively when the alarm is active and when Symphony/AWL is installed will also produce text/e-mail notifications.

- This sensor provides a relay closure that can be used to trip a fault when moisture is present. This can be used as a primary sump alarm or simply a wet basement or signal a blown washing machine hose.

WaterFurnace works continually to improve its products. As a result, the design and specifications of each product at the time of order may be changed without notice. Please contact WaterFurnace at 1-888-929-2837 for latest design and specifications. Purchaser's approval of this data set signifies that the equipment is acceptable under the provisions of the job specification. Statements and other information contained herein are not express warranties and do not form the basis of any bargain between the parties, but are merely WaterFurnace's opinion or commendation of its products. The latest version of this document is available at www.waterfurnace.com.

Revision Guide

Pages:	Description:	Date:	By:
Misc	Added UPC HAS Option (Updated Wiring Schematics, Nomenclature	1 Nov 2017	MA
All	Released Aluminum Coil Option	1 Sept 2015	MA
All	Wiring Schematics Updated, Electric Heating Updated, AWL added	11 June2015	MA
6-8	Updated Dimensional Drawings	22 Feb 2013	DS
50-53	Updated Wiring Diagrams	22 Feb 2013	DS
All	Revision Table Added, Minor Formatting Corrections	22 Feb 2012	DS

WaterFurnace works continually to improve its products. As a result, the design and specifications of each product at the time of order may be changed without notice. Please contact WaterFurnace at 1-888-929-2837 for latest design and specifications. Purchaser's approval of this data set signifies that the equipment is acceptable under the provisions of the job specification. Statements and other information contained herein are not express warranties and do not form the basis of any bargain between the parties, but are merely WaterFurnace's opinion or commendation of its products. The latest version of this document is available at www.waterfurnace.com.